Corrugated

ASBESTONE "400"

ROOFING AND SIDING

- **fireproof**
- **weatherproof**
- **rustproof**
- **permanent**

Gold Bond®
BUILDING PRODUCTS

architectural, engineering and data manual

NATIONAL GYPSUM COMPANY

BUFFALO 2, N. Y.

A.I.A. File No. 12-F

CORRUGATED ASBESTONE ROOFING AND SIDING

WHAT ASBESTONE IS • ITS COMPOSITION AND PROCESSING

As its name implies, Gold Bond Asbestone is a Manufactured Stone. It is composed of two inorganic substances — Portland Cement and Asbestos Fibre. In the manufacture of Asbestone, these two inorganic ingredients are uniformly blended in water so that the very fine, colloidal particles of the Cement completely surround and coat each strand of the Asbestos Fibre. This slurry is then processed by means of a laminating wet-machine which accumulates and builds, layer upon layer, very thin strata (approximately 1/16″ thick) consisting of colloidal Cement intermingled with and reinforced by "fabric-like" interwoven Asbestos Fibres. These strata are progressively accumulated, and are impounded into one another, until the desired thickness is obtained . . . While the sheet is still plastic, it is deeply corrugated; and then, is subjected to tremendous hydraulic pressure, consolidating the whole into a dense, tough, structurally-strong, stone-like sheet which, by reason of its inorganic components, possesses the same unalterable properties of stone itself.

The laminating process, by which Gold Bond Asbestone is manufactured, is the only known process which assures that the inter-locked reinforcing Asbestos Fibres, in their length, always lie horizontal and parallel to the plane of the sheet — thus imparting to the sheet the maximum load-bearing capacity obtainable. For example: it is a well-known fact that Veneer-Wood, made of thin plies of super-imposed wood, glued and pressed together, will invariably test stronger than a single monolithic board of the same thickness . . . The great depth of corrugation imparted to Asbestone provides safer drainage for the roof, and the fact that Extra Thickness is scientifically provided within these corrugations, tends to further increase the load-bearing capacity of the sheet.

ESTIMATING AND ENGINEERING SERVICE

An estimating and engineering service is maintained to assist you in the design of buildings using Standard "400" CORRUGATED ASBESTONE. Through this service, we can make accurate take-offs of your requirements and submit erection diagrams for approval of your engineers at the time your order is placed. Should you desire to have one of our Sales Engineers call on you, to discuss your particular problems, just write or telegraph. We are always anxious and ready to serve.

ERECTION SERVICE

In the event that application of Gold Bond Asbestone Corrugated is desired, our approved applicators will be pleased to estimate your project — contact us for name of approved applicator in your area. These firms, located all over the United States, are highly skilled in all the uses of Asbestone.

NOTE: It is realized that all the various methods of applying corrugated and accessories cannot be incorporated in one book. Therefore, in all details and drawings, we have tried to show only the most simple methods. Special erection and application techniques are sometimes required for unusual conditions. Where application is to be made over furnaces, boilers, refractories and other high-temperature processes, special application details are required. Information on these unusual uses will be furnished upon request.

SPECIFICATIONS

APPROVED BY THE ASBESTOS CEMENT PRODUCTS ASSOCIATION FOR THE APPLICATION OF CORRUGATED ASBESTOS CEMENT ROOFING AND SIDING

In an effort to provide the buyers of corrugated asbestos cement roofing and siding the ultimate in safety and protection, the Asbestos Cement Products Association has adopted and approved the following basic fundamentals in the application of these materials.

These specifications apply to Corrugated Asbestos Cement material made in sheets nominally 42″ wide and having 4.2″ corrugations, and a sheet thickness of ⅜″ minimum at the crest and vale of the corrugations.

1. Corrugated asbestos cement sheets shall be applied on roof and side walls in various lengths as required, suitable for the steel or wood structures designated.
2. Minimum roof slope shall be 3″ rise to the foot and it is preferable to have 4″ rise to the foot.
3. Sheets shall be approximately 42″ in width and of suitable length so that all end laps shall fall over a purlin or girt.
4. Sheets shall be applied by the staggered joint or straight joint method, with minimum 6″ end lap, and one corrugation side lap for 4.2″ sheets.
5. Corrugated asbestos cement roofing and siding shall not be applied on wood or steel structures with purlin spacings greater than 4′6″ on roofing, and girt spacings greater than 5′6″ on siding.
6. Black Plastic Compound shall be used on all side and end laps of roofing only and shall be applied by the continuous and unbroken bead or rope method. The compound on the side laps should be applied to the crest of the under corrugation and on end laps it should be applied as high up on the under sheet as is practical.
7. Expansion joints shall be used in corrugated asbestos cement roofing and siding at the same point as they occur in the supporting structure, but in no case shall unbroken areas of corrugated asbestos cement sheets be longer than approximately 200 ft. Buildings subjected to high internal temperature shall have expansion joints placed in corrugated asbestos cement roofing and siding on approximately 150 ft. centers.
8. Fasteners of approved type recommended by the various manufacturers shall be used. Two fasteners shall be used per sheet per purlin or girt on steel or wood structures. Three fasteners per sheet per purlin or girt are recommended at eave line on steel or wood structures.
9. One seam bolt shall be used between purlin and girt spacings on both roof and side walls at side laps.
10. Maximum overhang at eave line and gables shall not exceed 9″ beyond the girt line.
11. Finishing accessories of ridge roll, corner roll, eave and gable trim and louvre blades, etc., shall be applied in accordance with manufacturer's standard specifications. Pre-formed asphalt filler strip shall be used to close openings in the corrugated asbestos cement sheets when required at window-heads, eaves and lower edge of siding and similar places where necessary. Metal flashings shall be applied as indicated on drawings and shall be installed in accordance with standard practice. Flashing materials vary with conditions at building site but sheet lead is generally recommended.
12. In applying corrugated asbestos cement roofing, walk planks and chicken ladders must be used. Workmen must never walk between spans, but shall walk on the laps, and directly over the purlins.
13. Before application of this material, sheets shall be stacked in a level place, using 2″ x 4″ lumber on approximate 18″ centers at right angles to the corrugations, and stacks shall not be more than 4′ high. Stock piles of corrugated asbestos cement sheets shall be kept covered and protected from the weather.

SPECIFICATIONS

STANDARD LENGTHS, AREAS AND APPROXIMATE WEIGHTS OF SHEETS

Gold Bond Asbestone Corrugated Cement Roofing and Siding is composed of Portland Cement and Asbestos fibres. These two inorganic materials are uniformly blended in water and processed by means of a laminating wet machine which accumulates and builds layer upon layer until the desired thickness is obtained. While the sheet is still in its plastic state it is corrugated to the proper depth and then subjected to tremendous hydraulic pressure consolidating the whole into a dense, tough, structurally-strong sheet. Asbestone meets Federal Specifications SS-R-524, Type I.

FOLLOWING SIZES AVAILABLE FROM STOCK

Length of Sheet	Square Feet Per Sheet	Approximate Wgt. Per Sheet Uncrated
3′0″	10.50	42 lbs.
3′6″	12.25	49 lbs.
4′0″	14.00	56 lbs.
4′6″	15.75	63 lbs.
5′0″	17.50	70 lbs.
5′6″	19.25	77 lbs.
6′0″	21.00	84 lbs.
6′6″	22.75	91 lbs.
7′0″	24.50	98 lbs.
7′6″	26.25	105 lbs.
8′0″	28.00	112 lbs.
8′6″	29.75	119 lbs.
9′0″	31.50	126 lbs.
9′6″	33.25	133 lbs.
10′0″	35.00	140 lbs.
10′6″	36.75	147 lbs.
11′0″	38.50	154 lbs.
11′6″	40.25	161 lbs.
12′0″	42.00	168 lbs.

WEIGHTS AND SIZES

Width	42″
Pitch	4.2″ center to center
Length	3′-0″ to 12′-0″ see table
Weight	Approximately 4 lbs. per sq. ft.
Color	Natural Cement Gray
Thickness	Approximately ⅜″ at crests and vales 5/16″ at flanks
Depth of corrugation	1½″

Crated weight approximately 4.8 lbs. per sq. ft.

APPLICATION SPECIFICATIONS

Minimum roof slope	3″ rise to 12″
Maximum purlin (roof spacing)	4′-6″
Maximum girt (side) spacing	5′-6″
Minimum side lap	1 corrugation
Minimum end lap	6″
Weight sheets per net square	500 lbs.
Weight fasteners per net square	8 lbs.

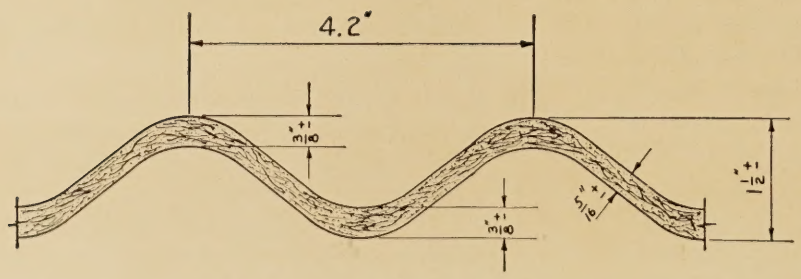

FIG. 1

HOW TO CALCULATE

Number of sheets per course: length of roof in feet divided by 3.15.

STAGGERED JOINT METHOD

APPLICATION DATA: Sheets are applied directly over skeleton frame using a one-corrugation side lap and a 6″ minimum end lap. Sheets shall be of such length that all end flaps occur over structural supports. Use side and end-lap cement (black plastic compound) on ALL side and end laps for roofing only. (See page 13.)

Requires but one style sheet; gives secure, weather-tight roof or side, neat, tidy appearance; cuts erection costs through minimum of application time.

METHOD: Lay first or eave course of sheets to guide line stretched along entire length of building. This line should be placed at a point corresponding to the eave or overhang of the roof.

Apply three or four sheets, fasten firmly; lap sheets one corrugation at side. Do not lay more than 10 continuous sheets in a course.

Trim off one corrugation from first sheet starting second course. Side butt this sheet snugly against the second sheet of first course. Lay the first sheet of this course with a minimum of 6″ end lap. Snap a chalk line a minimum of 6″ down from the top edge of the first course as a guide to ensure proper lap. Apply second sheet of second course with a one-corrugation lap over first sheet. Continue in same manner.

Trim off two corrugations from the first sheet starting the third course. Side-butt this sheet snugly against the second sheet of the second course, allowing 6″ to end-lap. Proceed as with second course.

Apply subsequent courses in the same manner, off-setting the first sheet of each course one corrugation from the proceeding one.

Use chicken ladder and planks when applying corrugated asbestos roofing as shown below.

FIG. 2

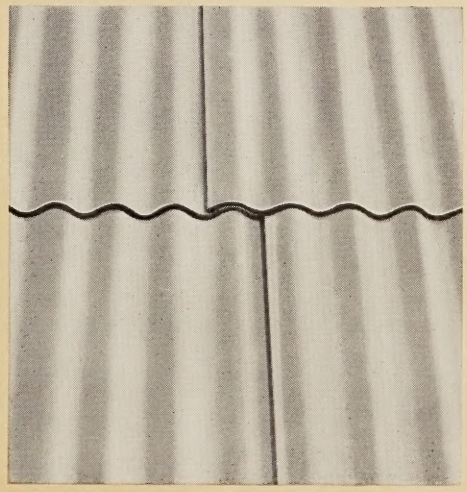

FIG. 3

SHEET APPLICATION

STRAIGHT-JOINT OR CORNER CLIPPED METHOD

The straight-joint method of application provides straight, parallel, vertical lines on the building—for use when such an effect is architecturally desirable.

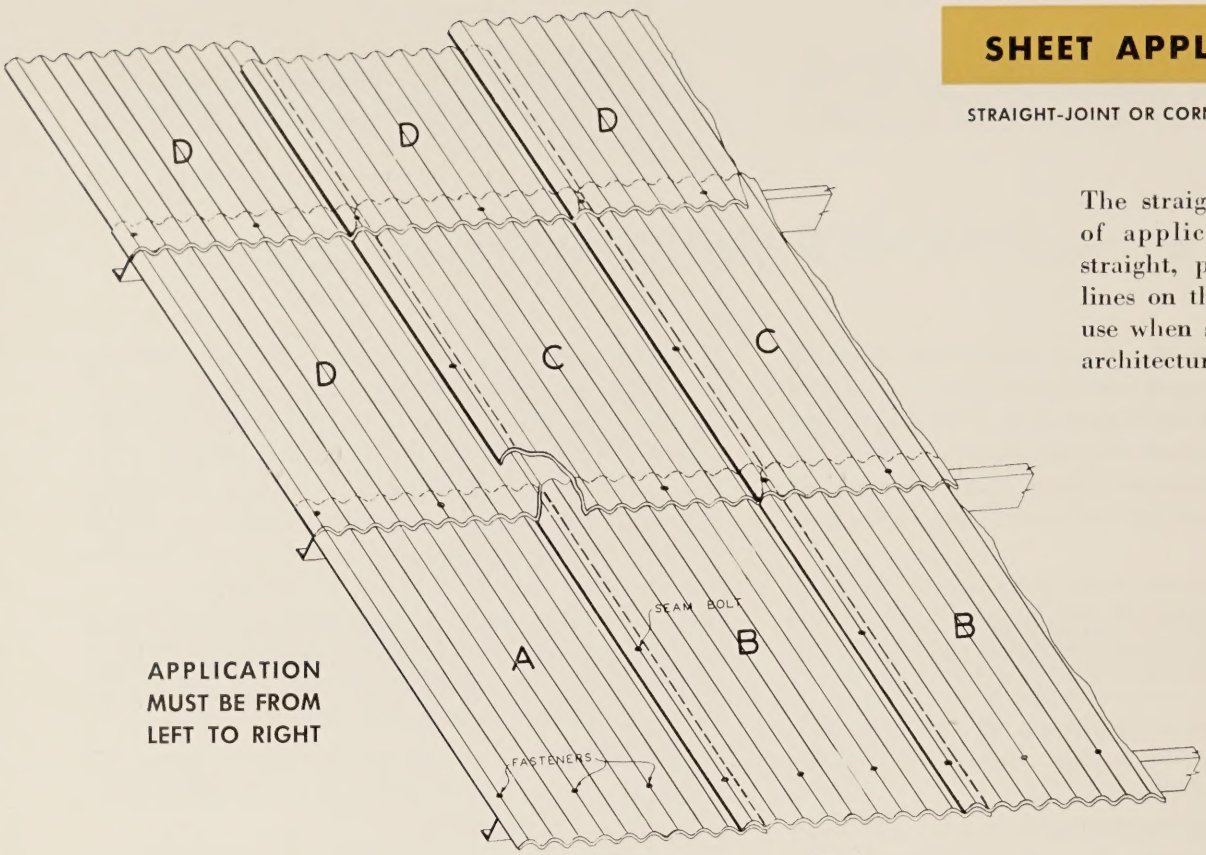

FIG. 4

Begin with Type A sheet, working from left to right. Follow erection diagram carefully, allowing proper height of sheet above purlin or girt. Second sheet first course (Type B) is lapped one corrugation, with only upper left corner cut. Each succeeding sheet on straight run roofing or siding shall be Type B. Where windows must be cut around, full sheets falling under windows will be Type A.

Begin second course with Type D (lower right hand corner cut); this butts against the upper left corner of the second (Type B) sheet in first course. Corner is cut diagonally to permit a 6″ end lap and a 4.2″ side lap. Second and succeeding sheets of second course are Type C (both upper left and lower right corners cut) except the terminal sheet (Type B).

Start top course with Type D, with the lower right corner cut and butting against the upper left corner of second sheet in course below. Each succeeding sheet shall be Type D, except terminal sheet which will be Type A with corners uncut.

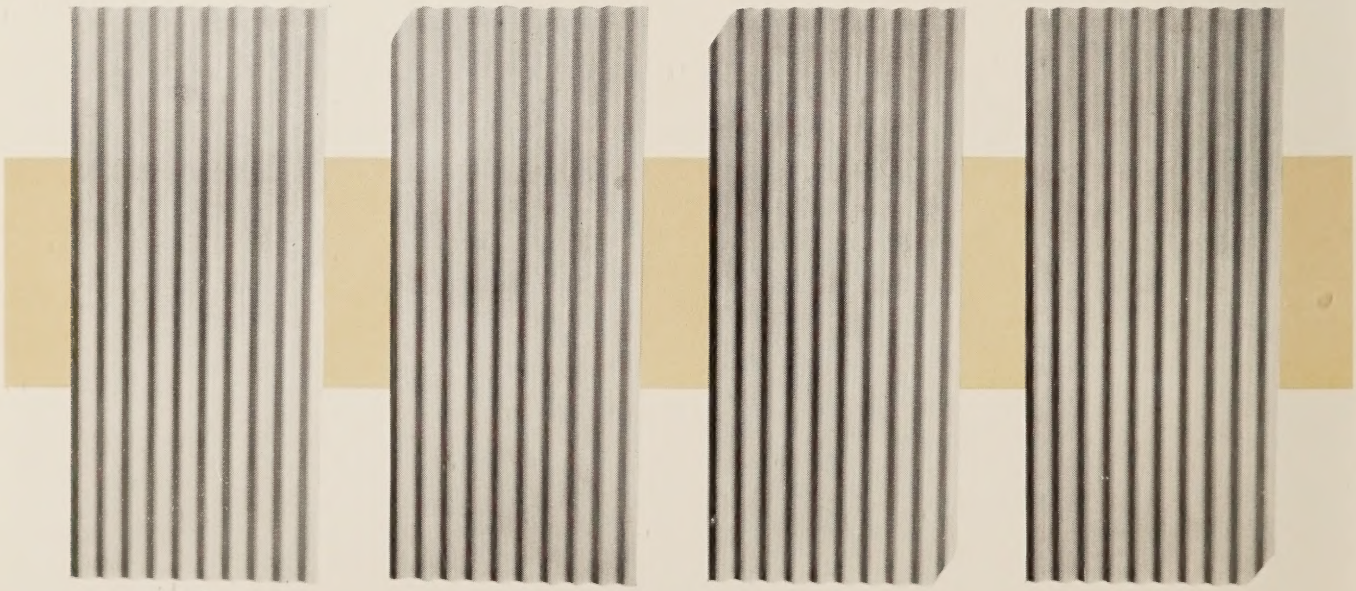

A B C D

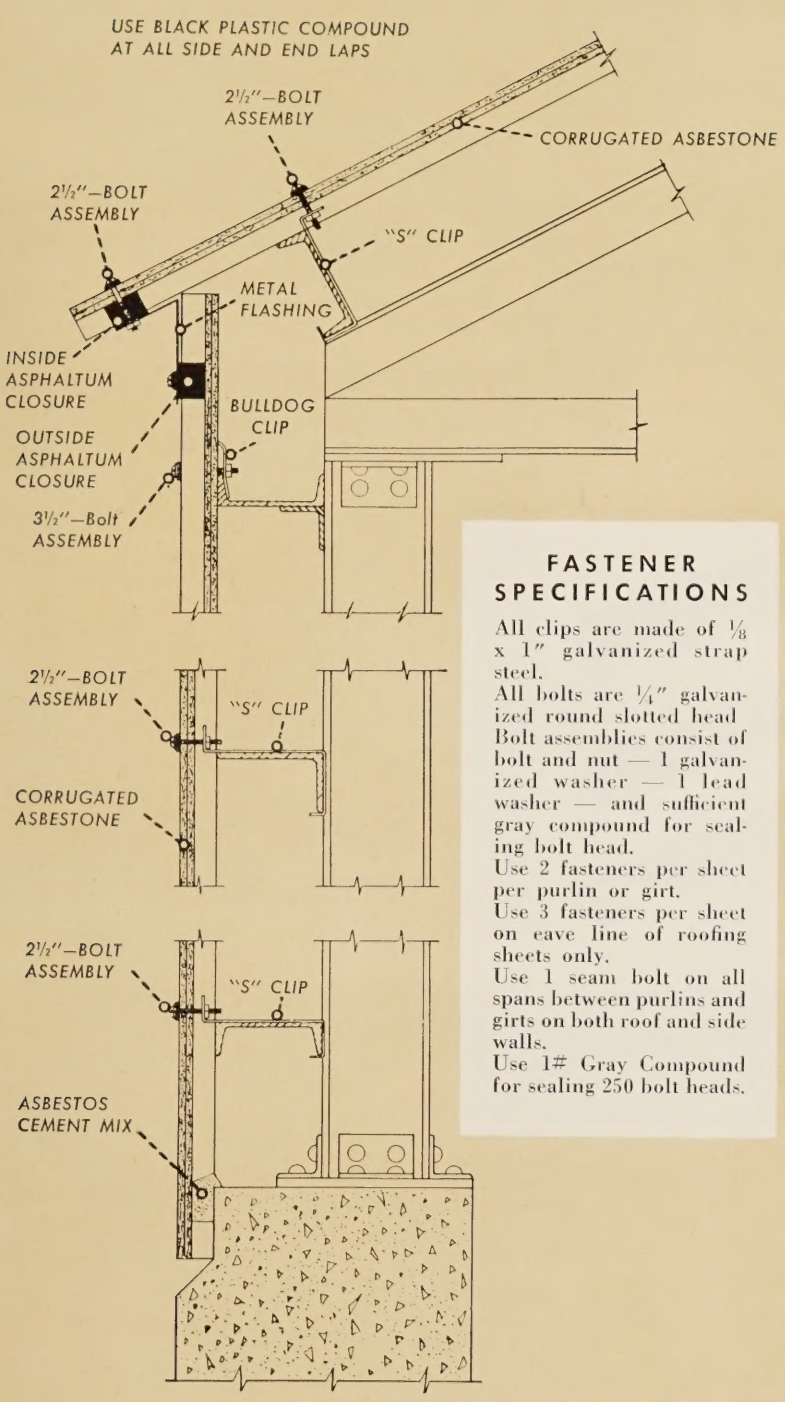

FIG. 5

FASTENER SPECIFICATIONS

All clips are made of ⅛ x 1" galvanized strap steel.
All bolts are ¼" galvanized round slotted head
Bolt assemblies consist of bolt and nut — 1 galvanized washer — 1 lead washer — and sufficient gray compound for sealing bolt head.
Use 2 fasteners per sheet per purlin or girt.
Use 3 fasteners per sheet on eave line of roofing sheets only.
Use 1 seam bolt on all spans between purlins and girts on both roof and side walls.
Use 1# Gray Compound for sealing 250 bolt heads.

Diagram illustrates the proper methods of applying Gold Bond Asbestone Corrugated Cement Roofing and Siding from foundation to roof to meet the conditions existing for most standard structural framing. All of the proper fasteners necessary in these applications are described on this page.

FASTENERS

NOTE: Special Clips can be furnished for application to any type of construction.
Lead-headed bolts available on special order.

Gray Plastic Compound furnished for use under lead washer.

All bolt holes should be drilled through crest of corrugation.

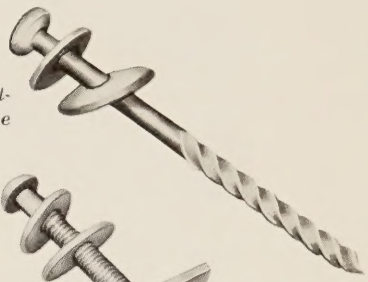

DRIVE SCREWS 4" *galvanized — complete with washers.*

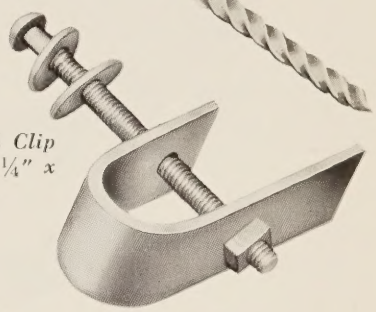

BULLDOG *galvanized Clip — to be used with ¼" x 3½" bolt assembly.*

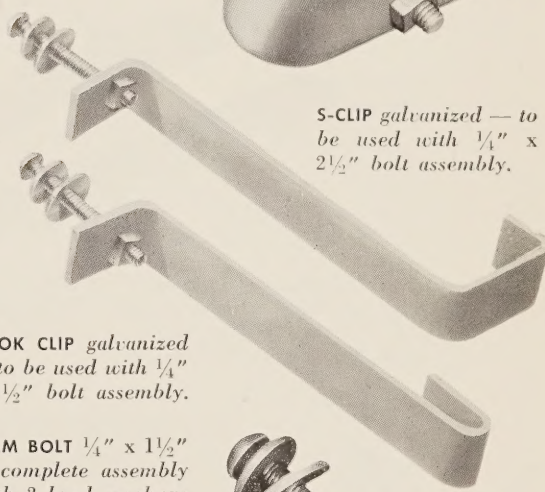

S-CLIP *galvanized — to be used with ¼" x 2½" bolt assembly.*

HOOK CLIP *galvanized — to be used with ¼" x 2½" bolt assembly.*

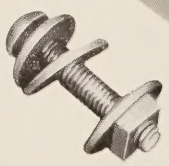

SEAM BOLT ¼" x 1½" *— complete assembly with 2 lead washers and 1 cut washer.*

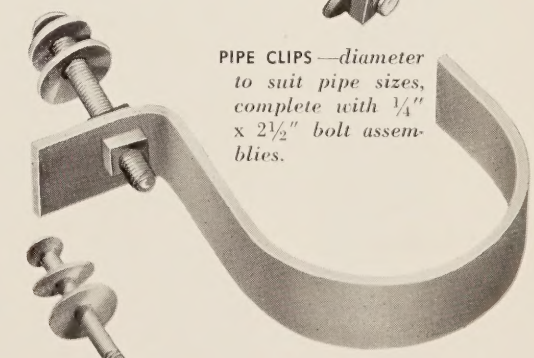

PIPE CLIPS *—diameter to suit pipe sizes, complete with ¼" x 2½" bolt assemblies.*

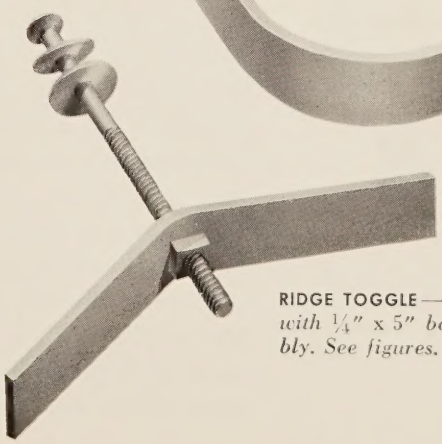

RIDGE TOGGLE *—complete with ¼" x 5" bolt assembly. See figures.*

ASPHALTUM CLOSURE STRIPS

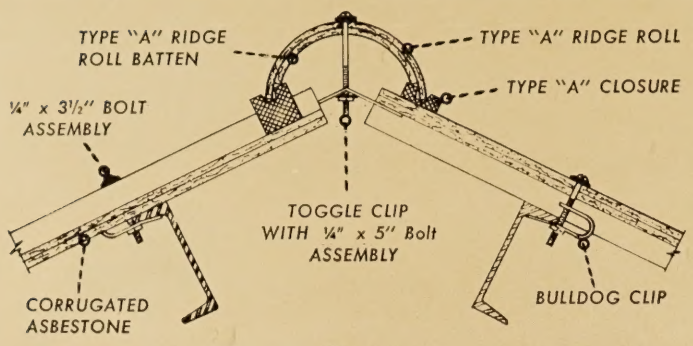

FIG. 6

TYPES

RIDGE CLOSURE — Type-A Closure Strip for use with Type A Ridge Roll, between Ridge Roll and ASBESTONE Corrugated Sheets (see figure 6).

INSIDE CLOSURE — Type B inside Closure Strip for use on under-side of sheets (see figure 7).

OUTSIDE CLOSURE — Type C outside Closure Strip for use on upper side of sheets, also for use with Double Section Ridge Roll (see figures 7 and 10).

HOW TO CALCULATE — Lineal feet to be covered divided by 3.15. Weight 1.2 lbs. per lineal foot.

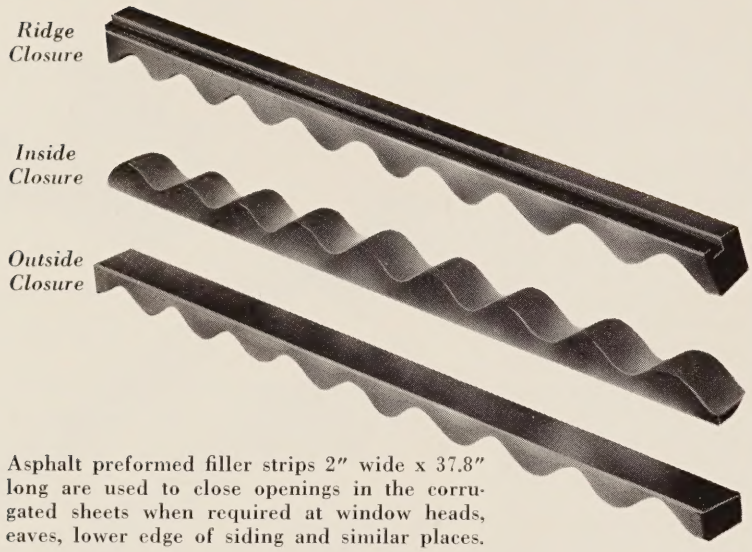

Asphalt preformed filler strips 2" wide x 37.8" long are used to close openings in the corrugated sheets when required at window heads, eaves, lower edge of siding and similar places.

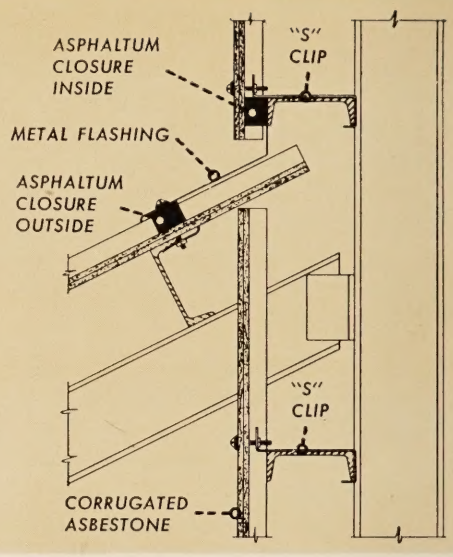

FIG. 7

CORNER ROLL SECTIONS AND DETAIL

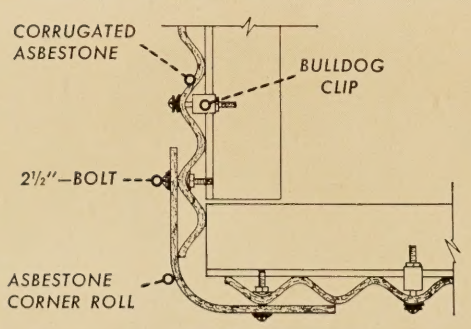

FIG. 8

←**OUTSIDE CORNER ROLL** *Section showing outside application of outside Corner Roll and bolts needed for installation.*

INSIDE CORNER ROLL→ *Section showing application of inside Corner Roll and Bolts necessary for application.*

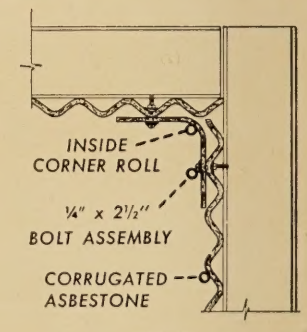

FIG. 9

Gold Bond Asbestone Outside Corner Roll

GOLD BOND ASBESTONE OUTSIDE CORNER ROLL is designed to give a pleasing, streamlined curve to the building corners; can be used effectively to trim and flash inside corners; adds "finish" to junction of an ell or spot where two buildings meet outside. Corner Roll is made in 4′ 0″ sections with 7″ wings from curb, having 4″ bell allowing for tight lap joint. No battens required.

INSIDE CORNER ROLL is finished in reverse, with smooth surface on concave side.

HOW TO CALCULATE

Number of pieces of Corner Roll=length of corner plus 10%, divided by 4.

Number of bolts=four 2½″ bolt assemblies with 2 lead washers per section.

Shipping weight 3 lbs. per net lineal foot.

TYPE A RIDGE ROLL AND BATTEN

GOLD BOND ASBESTONE Type A Half-round Ridge Roll with necessary batten, Ridge Roll is supplied in 4′ 0″ sections, battens are 6″ long; filler strips 37.8″ long.

HOW TO CALCULATE

Number of pieces of Ridge Roll = length of ridge to be covered divided by 4.

Number of pieces of Ridge Roll Batten = Number of pieces of Ridge Roll minus 1.

Number of Ridge Roll Type A Closure Strips = Number of corrugated sheets per course x 2.

Number of ridge toggle clips = Two per section.

Number of bolts per piece = Two 5″ bolt assemblies and two 1½″ bolt assemblies with two lead washers.

Approximate shipping weight 6 lbs. per net lineal foot. Use gray plastic compound on battens.

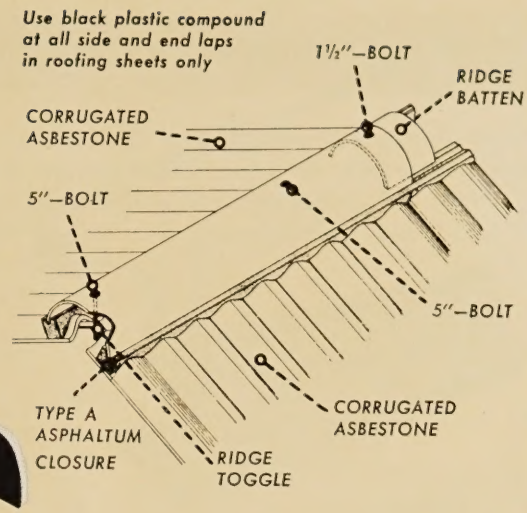

FIG. 10

Section showing application of Half-round Ridge Roll and batten with Type A asphaltum enclosure strip.

DOUBLE SECTION RIDGE ROLL

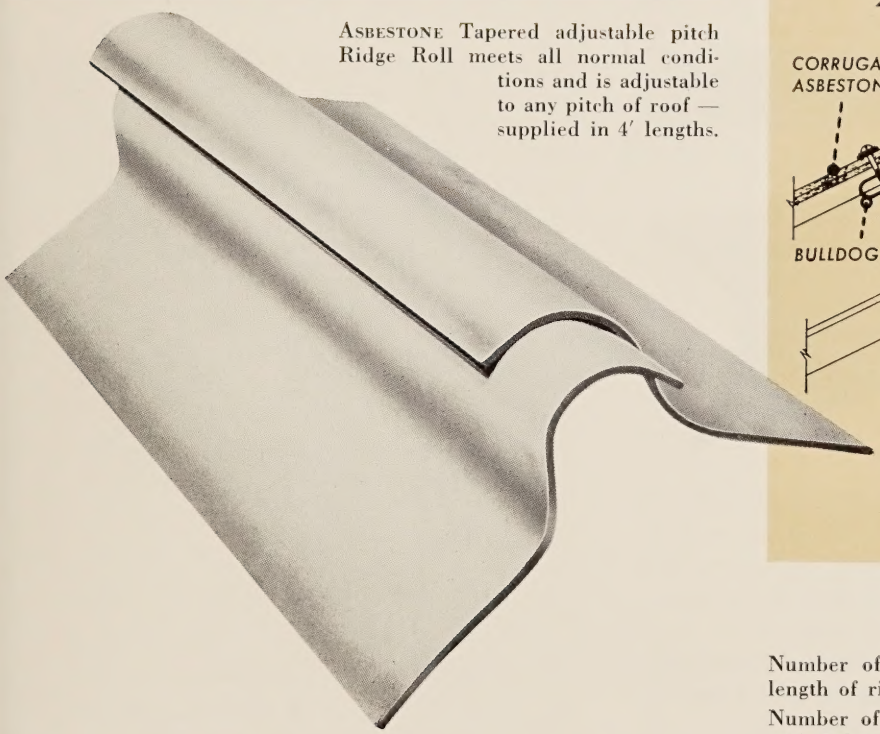

ASBESTONE Tapered adjustable pitch Ridge Roll meets all normal conditions and is adjustable to any pitch of roof — supplied in 4′ lengths.

Lower section of ridge designated and marked at factory with ONE DOT.

Upper section of ridge designated and marked at factory with TWO DOTS.

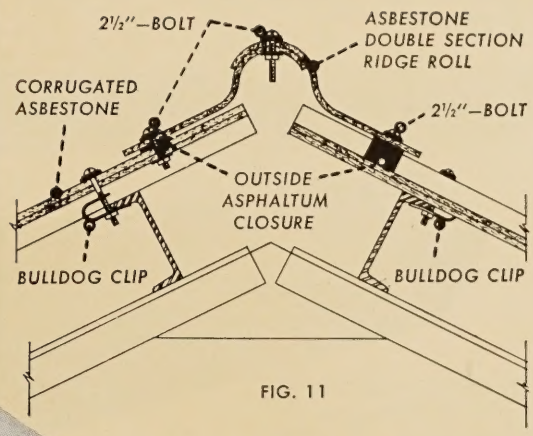

FIG. 11

Use Type C outside asphaltum closure strips for sealing between top of corrugated sheets and under side of flanks of Ridge Roll.

HOW TO CALCULATE

Number of two pieces of ridge roll sections equal to length of ridge to be covered plus 10% divided by 4.

Number of bolts equal five ¼″ x 2½″ bolt assemblies with 2 lead washers for fastening double section Ridge Rolls to sheets as shown.

Number of type C outside closure strips equal number of corrugated sheets per course times 2.

Approximate shipping weight 10 lbs. per net lineal foot.

When desired, non-shrinking asbestos cement mortar may be used for filling undulations of the roofing sheets instead of the asphaltum closure strips. Use 4 pounds of asbestos cement mix per net foot of ridge.

LOUVRE BLADES

GOLD BOND ASBESTONE Louvre Blades are made of the same materials as ASBESTONE Corrugated sheets for Roofing and Siding and are available in lengths from 4′ to 12′ at 6″ increments.

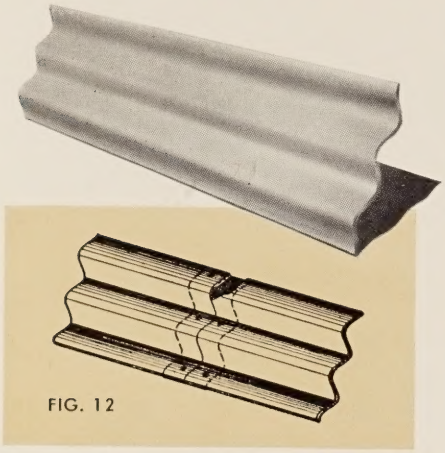

FIG. 12

Louvre Batten Detail

4 lb. lead batten 12″ long x 4″ wide set up in Gray Plastic Compound and bolted to louvre blades with ½″ x 1½″ bolts complete with galvanized and lead washers.

Where maximum ventilation is required GOLD BOND ASBESTONE Louvres offer a most economical and efficient method.

Use ASBESTONE eave trim for finishing at eaves

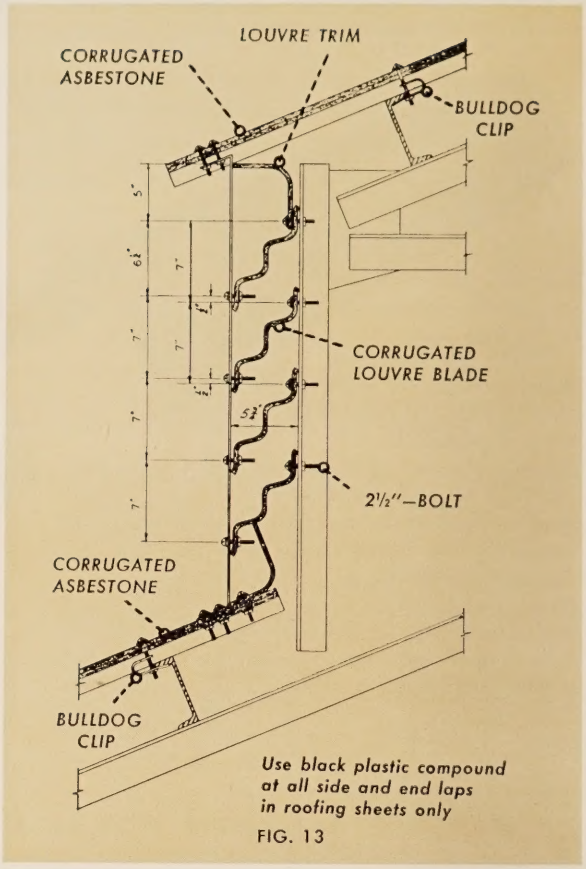

FIG. 13

Section showing application of GOLD BOND ASBESTONE Louvre Blades and details of installation.

EAVE AND GABLE TRIM

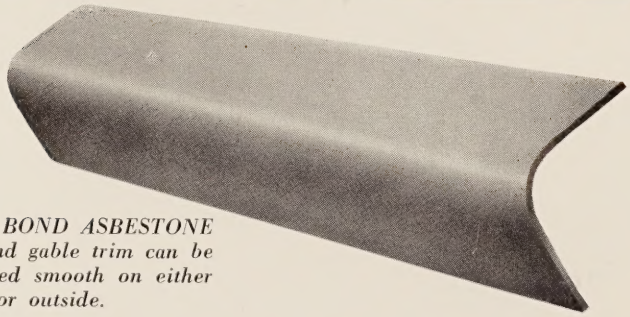

GOLD BOND ASBESTONE eave and gable trim can be furnished smooth on either inside or outside.

GOLD BOND ASBESTONE Eave and Gable Trim can be furnished for use where it is desired to dress up buildings or protect the eave openings from strong winds, rain and weather. For extreme weather tightness it is recommended that trims be used in combination with asphaltum closure strips or asbestos cement mix. Eave and Gable Trim are 4′ long with 6″ wings applied butted end to end.

HOW TO CALCULATE

Number of pieces of Eave or Gable Trim required=length of building divided by 4.

Number of bolts per piece=three ¼″ x 2½″ bolts and three ¼″ x 3½″ bolts with nut, cut and 2 lead washers per bolt.

Approximate shipping weight 3 lbs. per net lineal foot.

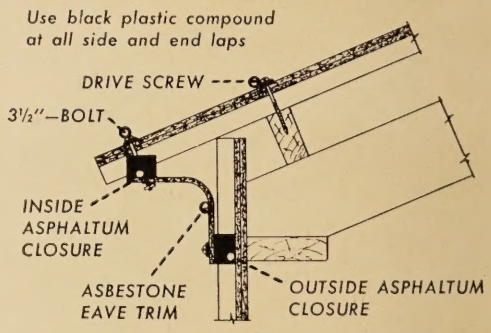

FIG. 14

Section showing application of GOLD BOND ASBESTONE inside smooth Eave Trim and details of installation.

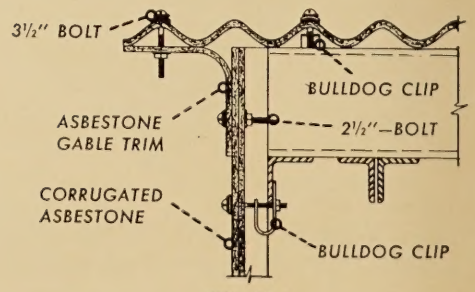

FIG. 15

Section showing application of GOLD BOND ASBESTONE inside smooth Gable Trim and details of installation.

WOOD CONSTRUCTION DETAILS

Construction details for application of GOLD BOND Asbestone Corrugated sheets to wood construction.

FASTENERS FOR APPLICATION OF CORRUGATED SHEETS TO WOOD CONSTRUCTION.

Use 4″ drive screw assembly; gray plastic under lead washers.

All fastener holes should be drilled, not punched and all fasteners should be placed at crest of corrugations.

Use 2 drive screws per sheet per purlin or girt or approximately 18″ on center. (See page 7.)

Use 3 drive screws per sheet on eave purlins approximately 12″ on center.

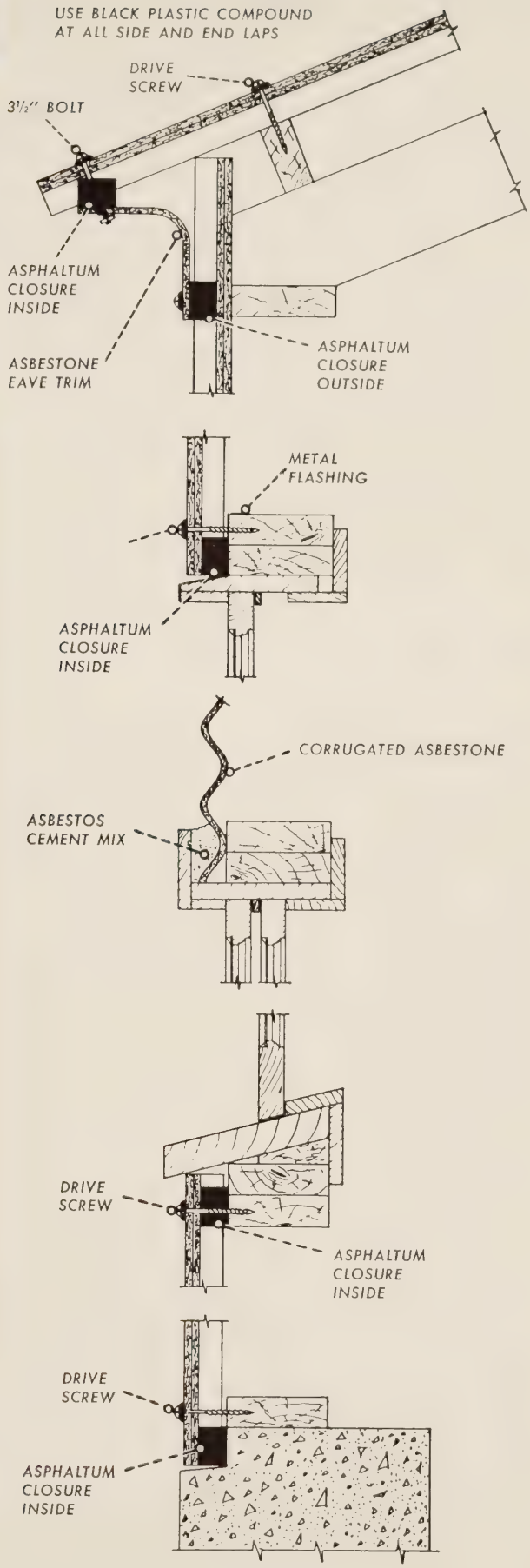

FIG. 16

STEEL CONSTRUCTION DETAILS

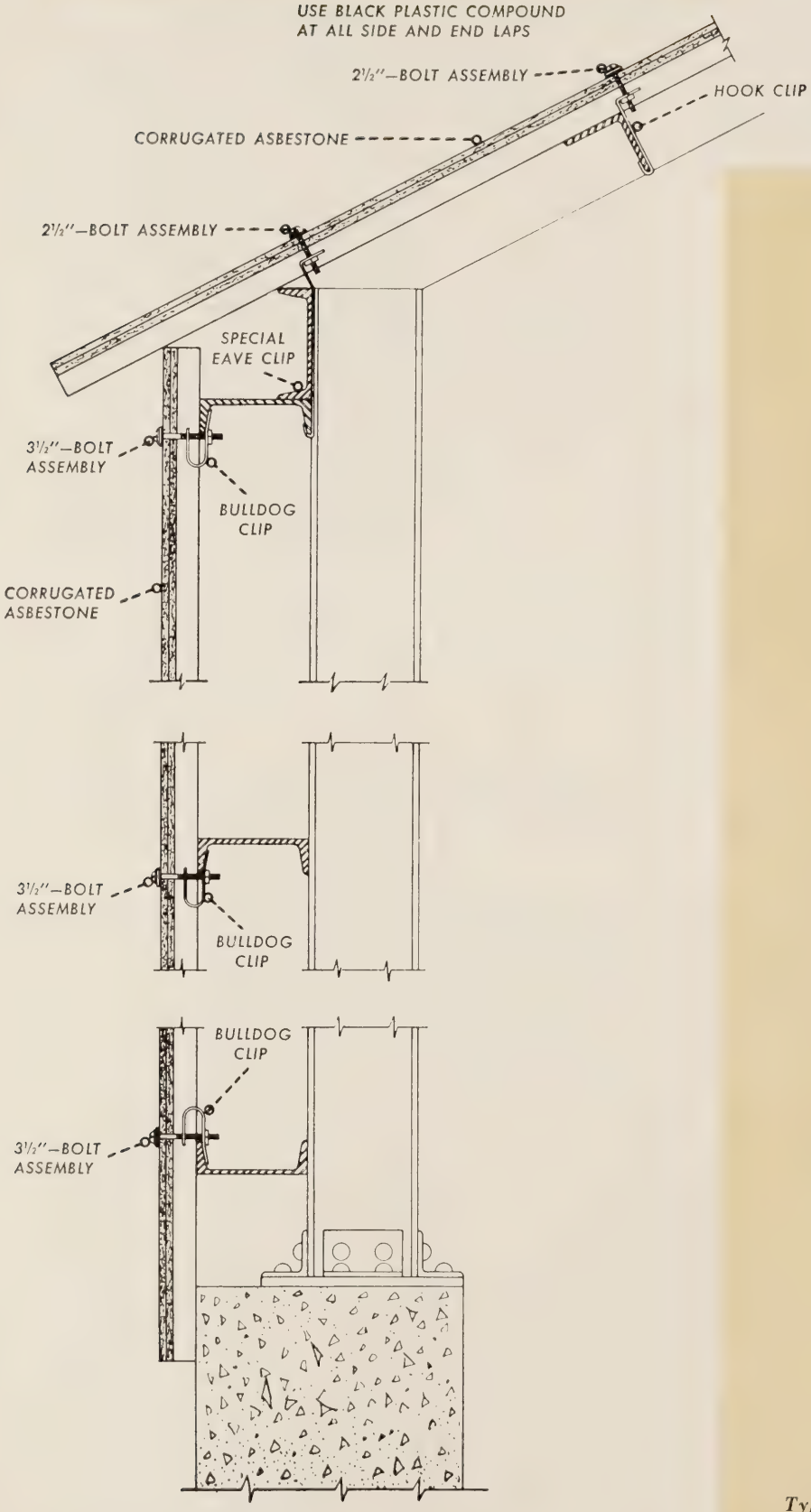

FIG. 17

Typical cross section of application of GOLD BOND ASBESTONE Corrugated sheets to steel frame.

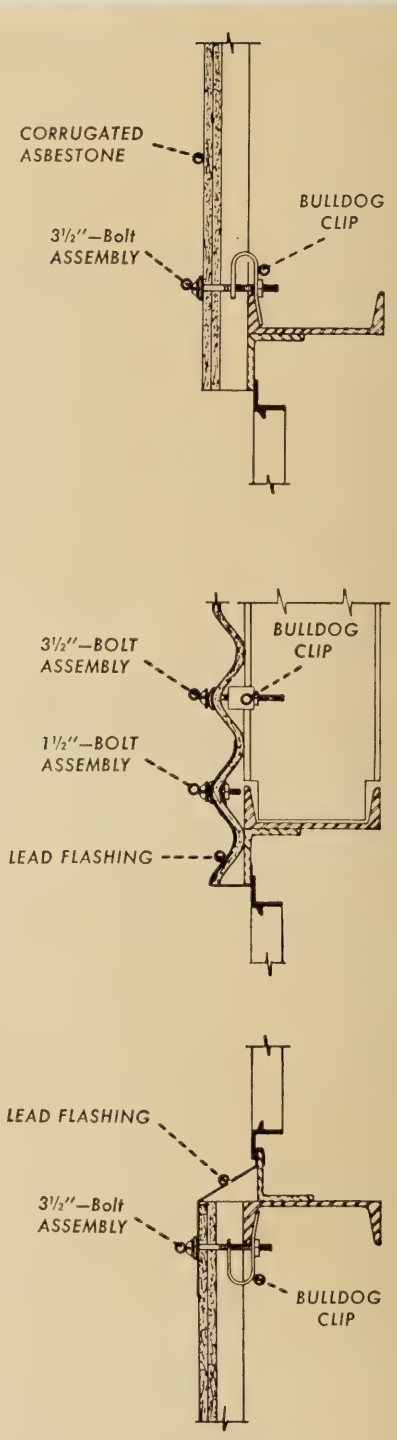

FIG. 18

Typical cross sections of application of GOLD BOND ASBESTONE Corrugated sheets and flashings around windows.

GUTTER AND VALLEY DETAILS

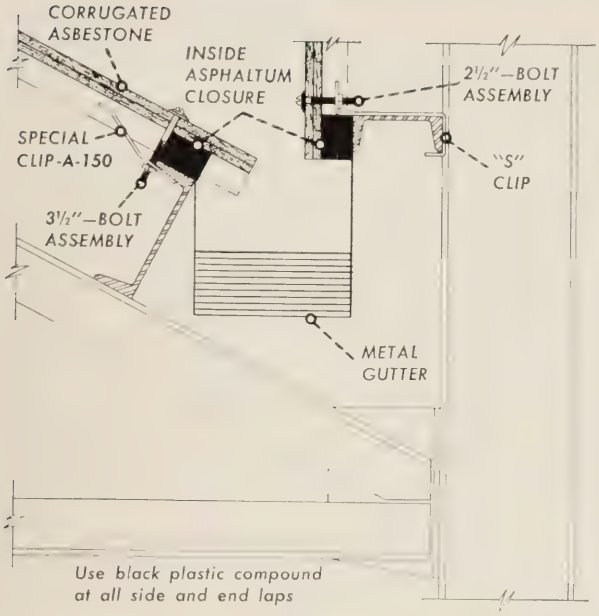

FIG. 19

Typical cross section of application of GOLD BOND ASBESTONE Corrugated sheets to valleys and gutters.

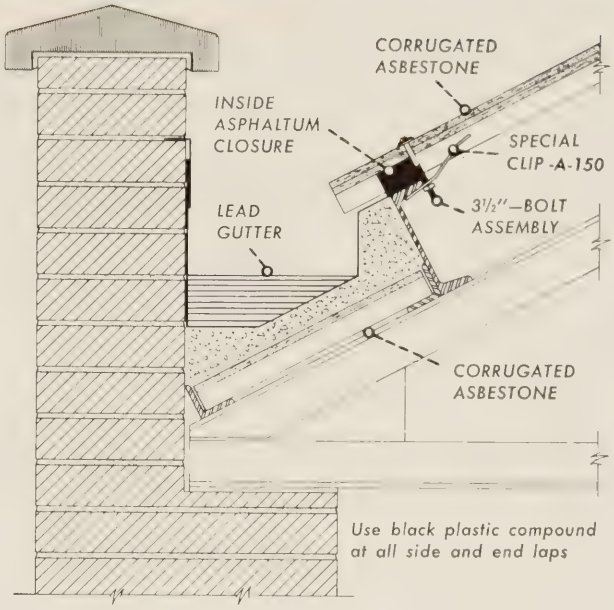

FIG. 20

Typical cross section of application of GOLD BOND ASBESTONE Corrugated sheets to valleys.

SECTION THROUGH EXPANSION JOINT

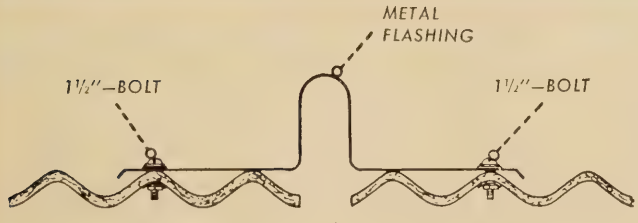

FIG. 21

Expansion joints shall be used in ASBESTONE Corrugated Asbestos Cement Roofing and Siding at the same point they occur in the supporting structure, but in no case shall unbroken areas of Corrugated Asbestos Cement sheets be longer than approximately 200 feet. Building subjected to high internal temperature shall have expansion joints placed in Corrugated Asbestos Cement Roofing and Siding on approximately 150 foot centers.

Expansion joints are to be of either galvanized iron or other suitable metal fastened as shown above, or of 4-pound chemical soft lead formed to fit the corrugations and held down to Corrugated Roofing with seam bolts 18" on centers and embedded in black plastic compound.

BLACK PLASTIC COMPOUND

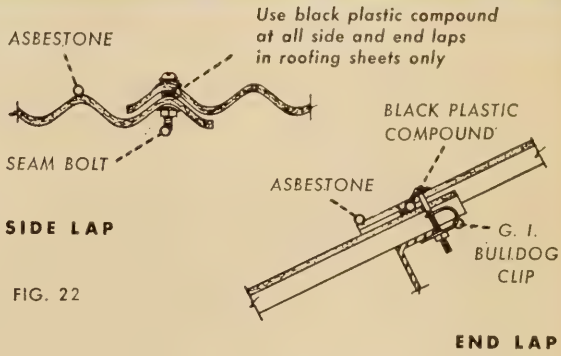

FIG. 22

This material is manufactured especially for National Gypsum Company to be used for sealing of both side and end laps of corrugated roof. It shall be applied by the continuous and unbroken bead (pencil thickness) or rope method. The compound on the side laps should be applied to the crest of the under corrugation; on end laps it should be applied as high upon the under sheet as is practical.

HOW TO CALCULATE — Five pounds of black plastic compound per net square, to be applied with a gun. Weight 9 lbs. per gallon.

GRAY PLASTIC COMPOUND

This material is a high grade putty, manufactured for National Gypsum Company and sold under the Gold Bond label. It is used for sealing under lead washers at bolt holes and for caulking at windows, doors, etc. and for sealing batten on type A Ridge Roll.

HOW TO CALCULATE — One pound for sealing 250 bolt heads. Weight 16 lbs. per gallon. (Knife Grade)

ASBESTONE CEMENT MIX

Asbestos cement mix is a grouting cement composed of the same materials in the same proportion as Gold Bond Asbestone sheets and accessories. It may be used as a substitute for asphaltum closure strips and at various locations in building where weather tightness is desired.

HANDLING AND STACKING

Before the application of Gold Bond Asbestone Corrugated Asbestos Cement Roofing and Siding, sheets should be stacked in a level place, using 2″ x 4″ lumber on approximately 18″ centers at right angles to the corrugations and stacks should not be more than 4 feet high. Stock piles of Gold Bond Asbestone Corrugated sheets should be kept covered and protected from the weather to prevent water stain while in the piles.

It is desirable that only one sheet length should be placed in each pile and accessory pieces of ridge roll, corner roll, etc., should be stored in a safe place until they are ready for use.

Fasteners should be kept in their original containers under cover until ready for use.

Unless otherwise specified, Gold Bond Asbestone sheets are shipped loose in box cars, strongly braced to prevent breakage. The Ridge Rolls, Corner Rolls, and other special shapes are also shipped loose, usually being placed on top of the sheets and, in turn, held in place by steel strapping. Clips are packed in sacks or bags. The bolts, nuts and washers are packed in kegs or boxes. Asbestos cement mortar is packed in sacks.

Included in every car of Gold Bond Asbestone is an erection data sheet showing details of construction.

NOTES TO APPLICATORS

Suitable storage space should be selected convenient to the building site and, if possible, sheets should be distributed for easy access to the areas to be covered and properly protected from the elements.

It is customary for our Engineering Department to supply complete layout drawing showing exact location of all sheets and accessories. This layout print should be carefully studied before erection and proper procedure outlined to allow for a minimum of labor.

In applying Gold Bond Asbestone Corrugated Cement Roofing, walk planks and chicken ladders should always be used. Workmen should never walk between spans but should walk on laps and directly over purlins.

It is important that all fastener holes should be drilled and not punched and that the holes in the corrugated sheets should always be drilled in the high part of the crest of the corrugation.

Caution should be taken to assure that all fasteners are drawn snug but never excessively tight.

Gold Bond Asbestone Corrugated Asbestos Cement Sheets may be readily cut with any standard make of saw having four or five teeth to the inch, but portable electric hand saws are desirable with ⅛″ thick abrasive wheel. Electric drills are desirable but breast drills or brace may also be used.

All roofing and siding sheets are applied with corrugations nesting and care should be taken that the first few sheets be laid correctly and the use of chalk lines and levels are recommended.

All special cuts such as gables, windows, doors, etc., should be made on the job to insure tight application.

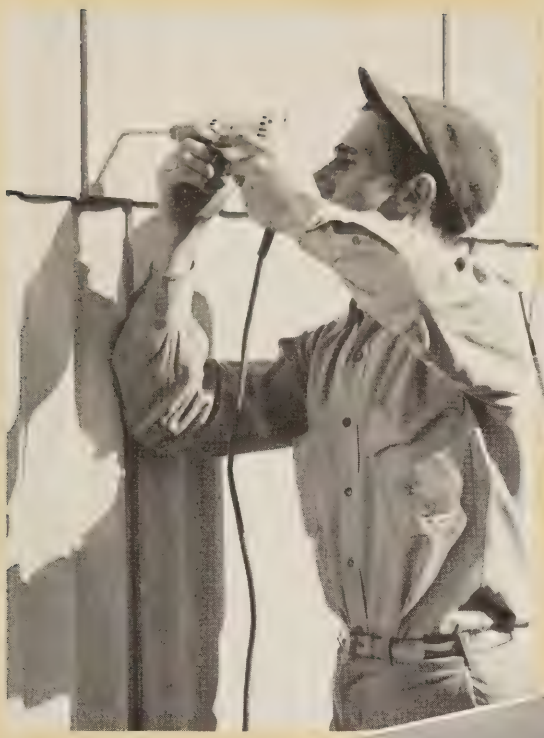

Holes for fasteners should be drilled, not punched.

Illustrating proper method of sawing GOLD BOND ASBESTONE sheets.

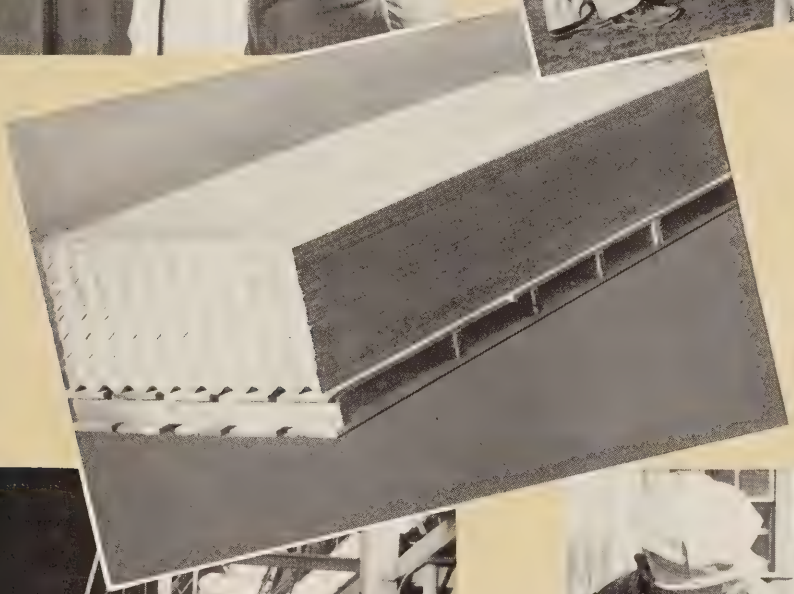

Illustrating proper method of stacking GOLD BOND ASBESTONE sheets.

Illustrating proper method of hoisting GOLD BOND ASBESTONE sheets.

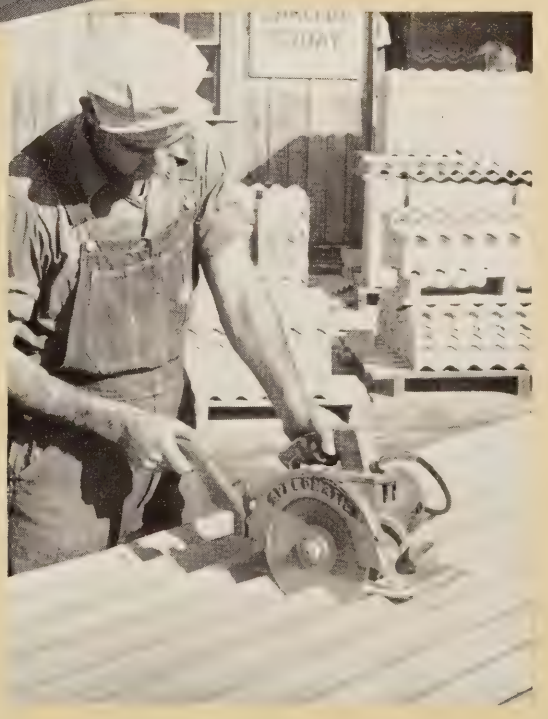

Close-up of proper method of sawing GOLD BOND ASBESTONE sheets.

Gold Bond®

ROOFING • SIDING

ACOUSTICAL PRODUCTS

GYPSUM BOARDS

LATH • PLASTER • LIME

INSULATION BOARDS

METAL PRODUCTS

PAINTS • TEXTURES

ROCK WOOL

NATIONAL GYPSUM COMPANY, BUFFALO 2, N. Y.

Atlanta Birmingham Boston Buffalo Charlotte Chicago Cincinnati Cleveland Dallas Denver Detroit Garwood, N. J. Houston Indianapolis Jacksonville Kansas City Milwaukee Minneapolis New Orleans New York Oklahoma City Philadelphia Pittsburgh St. Louis Washington

FORM 2032 L 1-56

Gold Bond®

CORRUGATED ASBESTONE

ROOFING AND SIDING

Stud Weld Fasteners

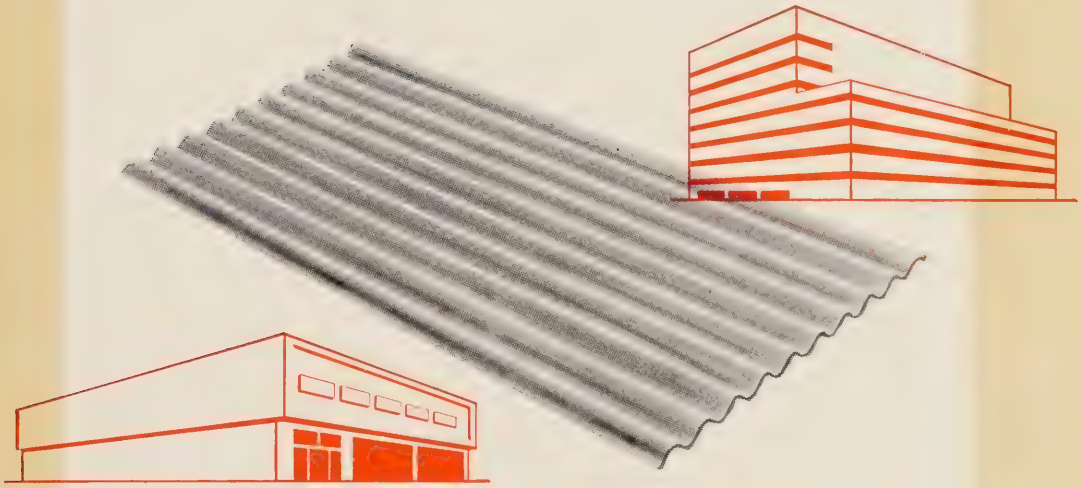

Technical Bulletin

NO. 2032A

MAY 1957

A. I. A. File No. 12-F

STUD WELD FASTENERS

ADVANTAGES:

1. All work is done from the topside of the roof. All interior scaffolding is eliminated. A man is not needed inside.
2. No clips or fasteners are exposed on the interior of the structure.
3. Nut assemblies and studs can be furnished to meet any type of corrosive atmospheric condition.
4. Welding equipment is portable, semi-automatic, durable and easy to operate. One type, one size fastener stud does the entire job.

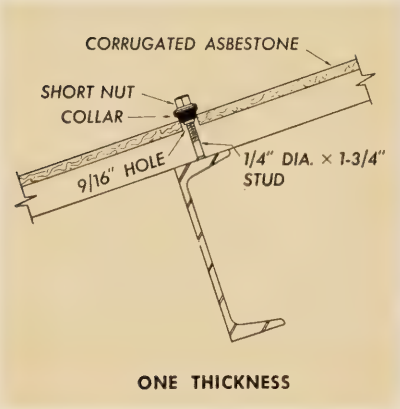

ONE THICKNESS

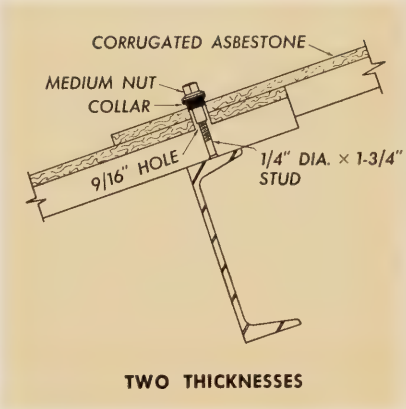

TWO THICKNESSES

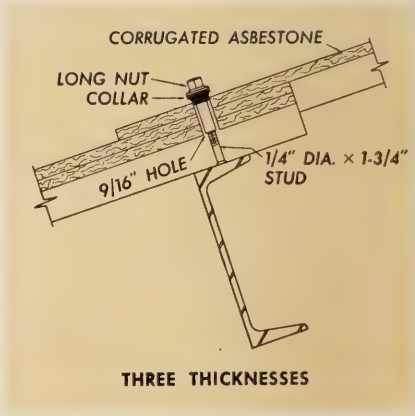

THREE THICKNESSES

NOTE: The length of the stud remains constant for application of one, two and three thicknesses of corrugated "ASBESTONE." The length of the collar nuts vary in direct ratio to the number of sheets secured. Use ¼" dia. x 1¾" studs for fastening corrugated "ASBESTONE." Studs to be cadmium plated or stainless steel and flux loaded. Nuts to be solid zinc alloy or stainless steel with neoprene collar. Side lap bolt and washer to be cadmium plated or stainless steel.

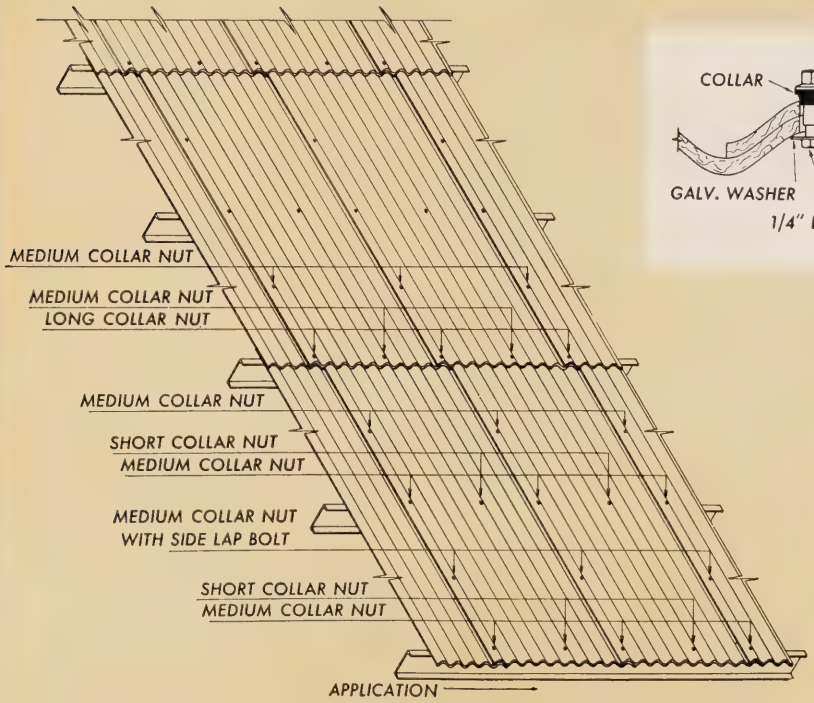

ROOF PLAN

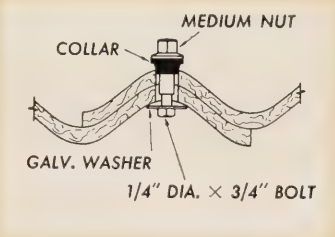

For fastening side laps use ¼" dia. x ¾" bolt with washer, medium nut and neoprene collar.

or

¼" dia. toggle bolt with short nut and neoprene collar.

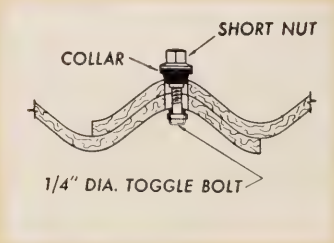

SIDE LAP TOGGLE FASTENER

STUD WELD APPLICATION

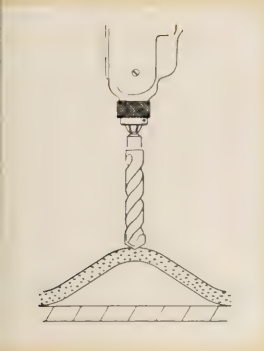

1. Set "ASBESTONE" sheet in place. Drill 9/16" hole in crest of corrugation with carboloy tip drill.

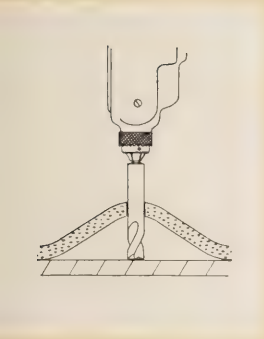

2. Insert ½" diam. end mill bit in hole to remove rust and paint from purlin or girt to insure good bond and ideal welding surface.

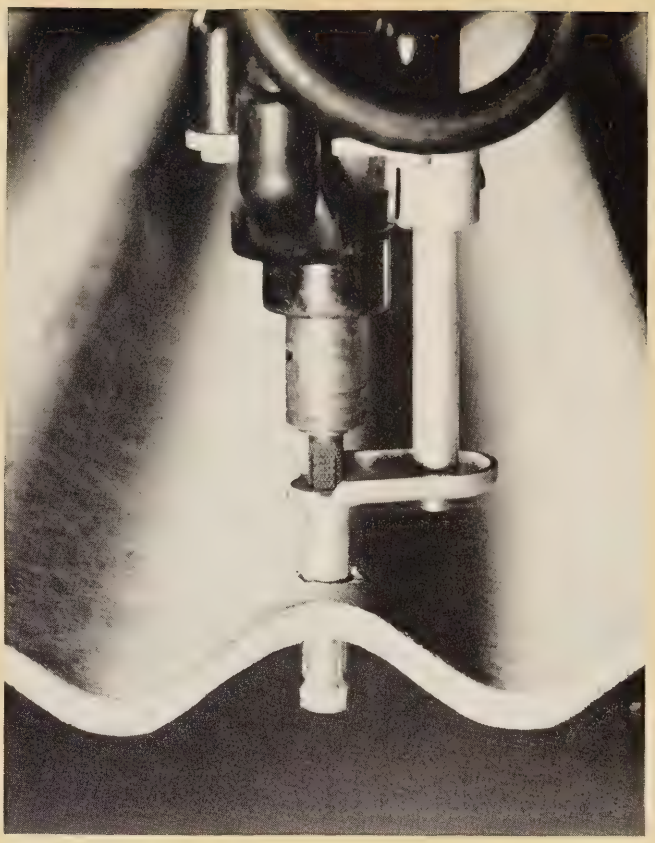

3. Insert threaded end of stud into the chuck, place the ceramic ferrule in ferrule holding device and insert the tube assembly through the hole. The stud welding gun is held perpendicular to and firmly against the purlin or girt. Press the gun's trigger and the stud is end-welded in a fraction of a second.

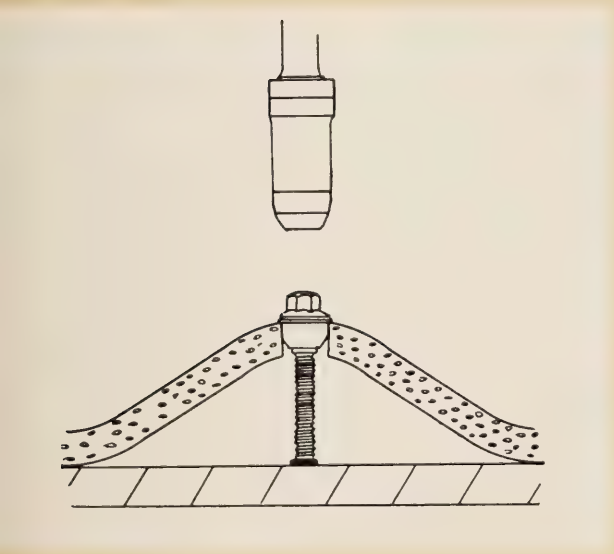

4. Apply proper size nut to stud and tighten with hand socket wrench or nut runner. Tighten nut to make positive seal between the collar and "ASBESTONE" sheet. Excessive tightening is not necessary to obtain a weathertight seal.

5. Thread side lap bolt assembly thru hole from under side of sheet with special side lap wrench and apply nut, or use toggle bolt especially designed for side laps. No special wrench is needed when side lap toggle bolt is used.

Stud Weld Fasteners and Equipment can be procured from

NELSON STUD WELDING, Lorain, Ohio

KSM PRODUCTS, INC., Merchantville 8, New Jersey

Gold Bond®

ROOFING • SIDING

ACOUSTICAL PRODUCTS

GYPSUM BOARDS

LATH • PLASTER • LIME

INSULATION BOARDS

METAL PRODUCTS

PAINTS • TEXTURES

ROCK WOOL

CORRUGATED ASBESTONE DIVISION

NATIONAL GYPSUM COMPANY

BOX 5257 B NEW ORLEANS, LOUISIANA

FORM 2032A B 5-57

Gold Bond

CORRUGATED ASBESTONE

ROOFING AND SIDING

Supplementary Information "Topseal", "Holegrip" and Side-Lap Fasteners

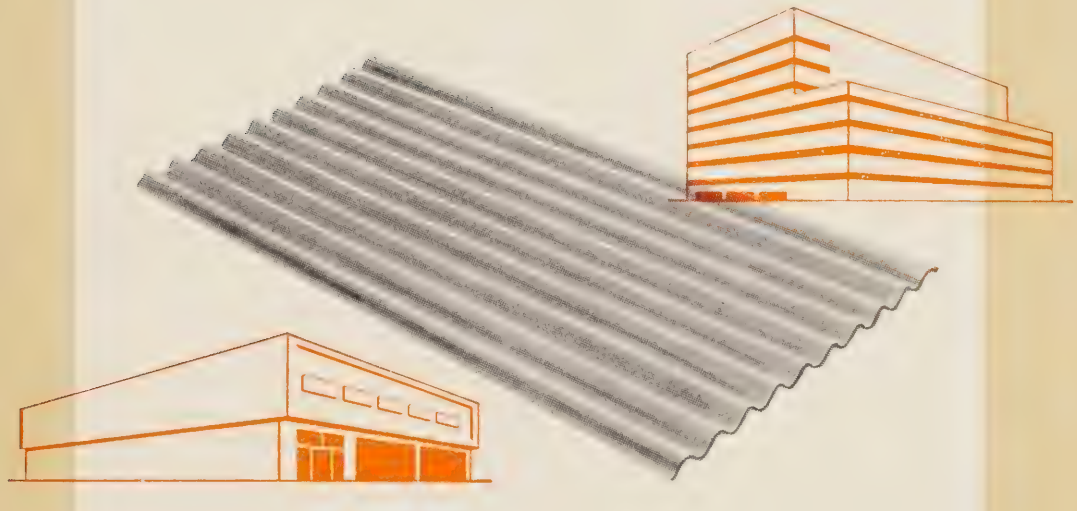

Technical Bulletin

NO. 2032B MAY 1956

A. I. A. File No. 12-F

CORRUGATED "ASBESTONE" ROOF PLAN

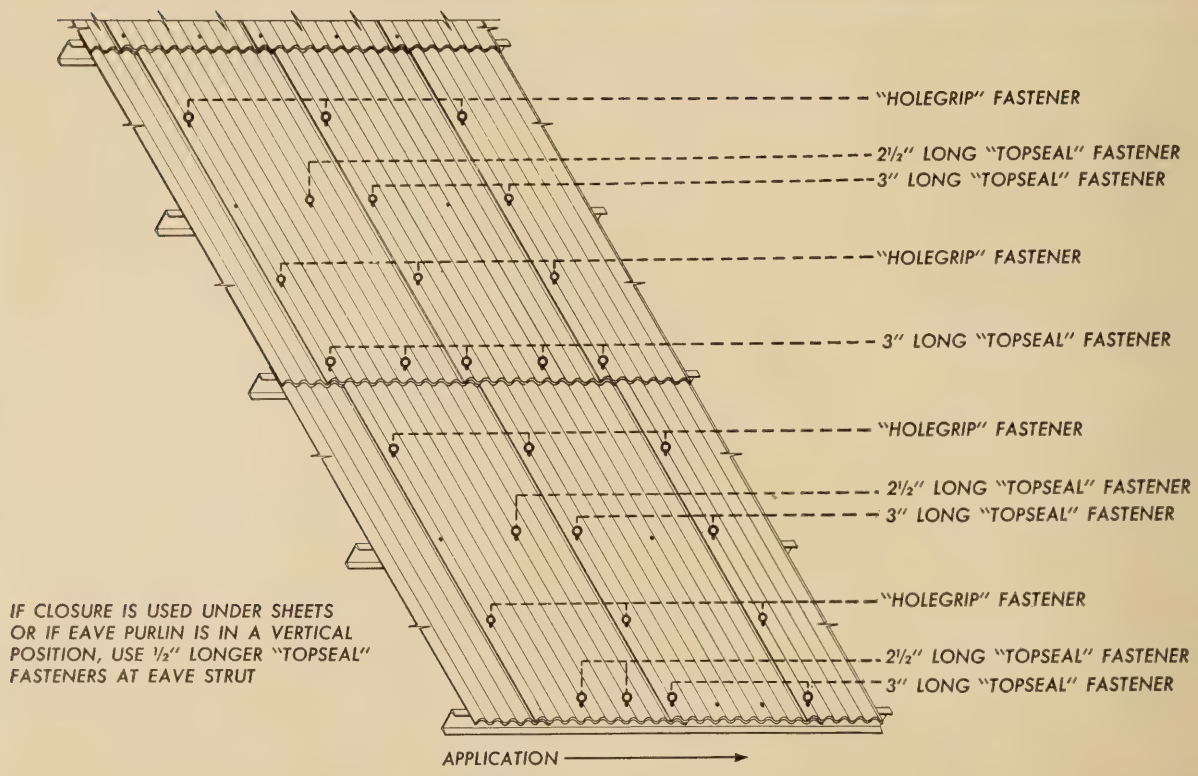

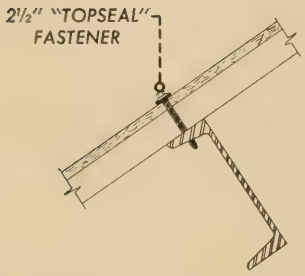

SECTION THROUGH ONE THICKNESS

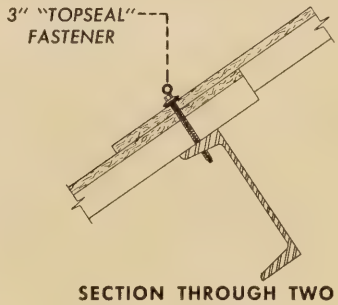

SECTION THROUGH TWO THICKNESSES

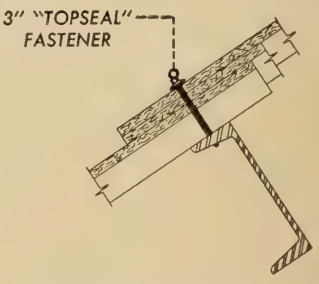

SECTION THROUGH THREE THICKNESSES

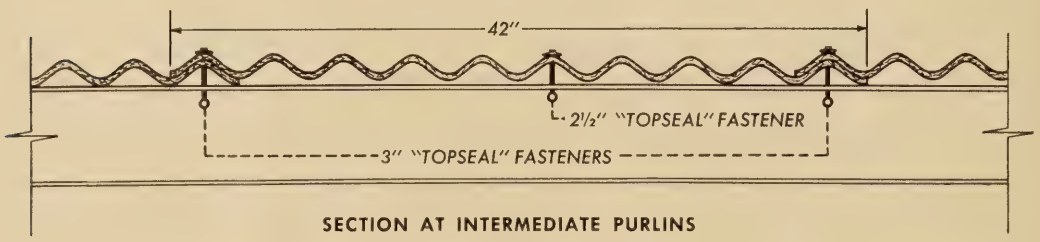

SECTION AT INTERMEDIATE PURLINS

NOTE: "Topseal" self tapping screws, "Holegrip" bolts and siding side lap bolts are available in #410 stainless steel or cadmium plated carbon steel.

"TOPSEAL" FASTENER ASSEMBLY

NO. 14 HEX. HEAD TYPE "B" SELF TAPPING "TOPSEAL" FASTENER

"WEATH-R-SEAL"® WASHER PRE-ASSEMBLED BEFORE SHIPMENT—METAL PORTION OF WASHER .729" O.D. x .264" I.D. NO. 20GA. TYPE 430 STAINLESS TYPE STEEL. "NEOPRENE" COMPOSITION BLACK COLOR 7/64" TO 3/64" THICK.

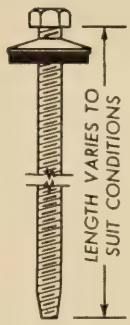

SIDE LAP FASTENER

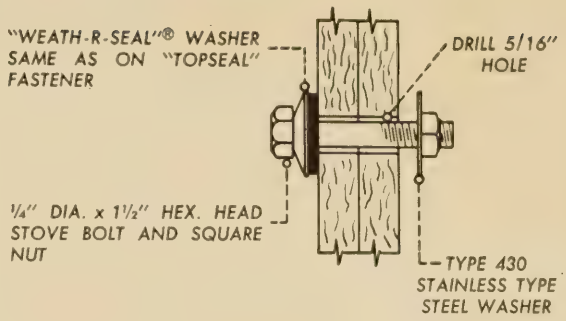

"HOLEGRIP" FASTENER ASSEMBLY

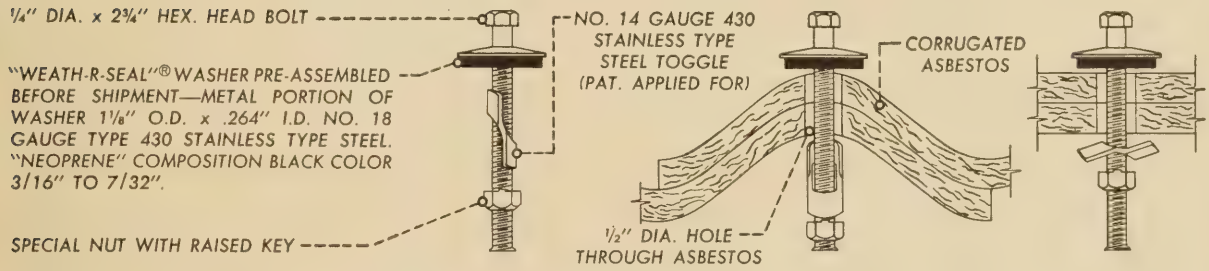

"HOLEGRIP" FASTENER SOCKET

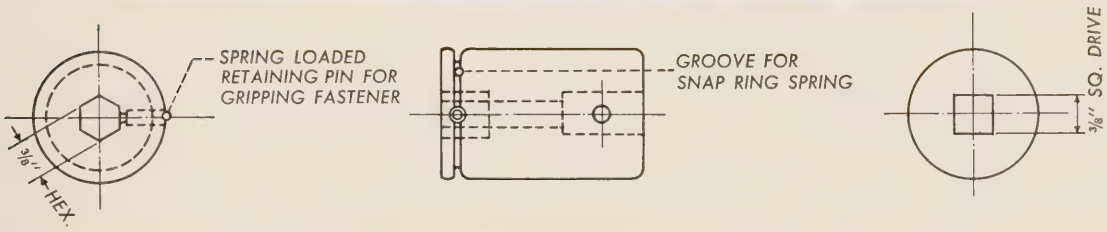

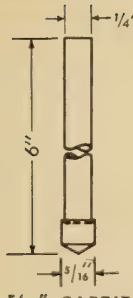

5/16" CARBIDE FABCO DRILL

For holes in sheets for "Topseal"

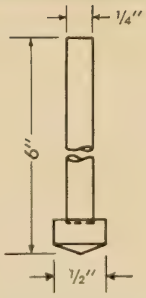

1/2" DIA. CARBIDE FABCO DRILL

For holes in side laps for "Holegrip"

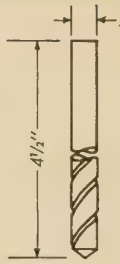

NO. 1 SPECIAL SPLIT FABCO DRILLS

For drilling holes in steel framing

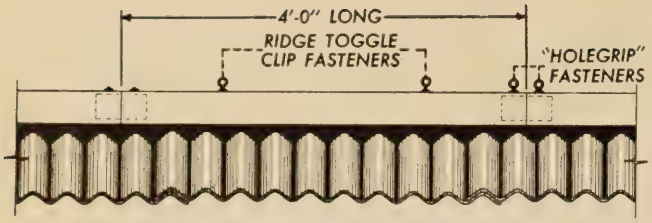

TYPE A RIDGE ROLL ELEVATION

On ridge roll elevations batten strips should be fastened to end of ridge roll with bolt and nut and next section fastened to bottom with "Holegrip" fastening batten to ridge roll before placing second section of ridge roll.

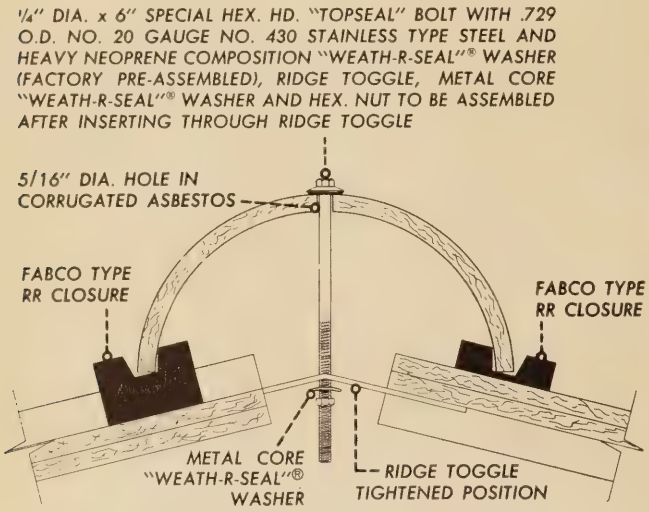

SECTION AT RIDGE TOGGLE CLIP

First fasten batten strip to one end of each ridge roll section. Insert 6" bolt through hole in ridge roll. Assemble ridge toggle, metal core "Weath-R-Seal"® washer, and nut. Have all ridge toggles lying parallel to length of ridge roll. Place section on closure and line up. Turn all bolts 1/4 turn to engage toggles. Lift up on bolt with hole grip mechanical socket and tighten.

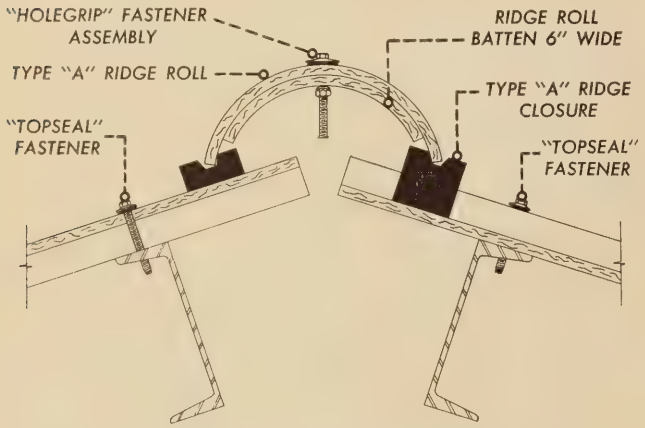

SECTION AT RIDGE BATTEN

ERECTION OUTLINE AND TOOL DATA FOR "TOPSEAL" FASTENERS

Drill $5/16''$ dia. hole in sheets, using Fabco carbide drills, to provide clearance for Topseal. This is **imperative.**

Sheets may be drilled on the ground, or in place.

Drill hole in steel framing with #1 special Fabco sheeter's drill. Use any suitable drill with a speed of 1800-2000 R.P.M.; 2.5 amps. to 3.0 amps.

For driving "Topseal" fasteners, use suitable nut-runner, 500 R.P.M., equipped with Fabco hex hardened sheeter's socket.

Care must be taken not to drive fasteners too tight. **Maximum Torque 50-60 Inch Pounds.**

These details show standard fasteners commonly used. To suit unusual conditions, special fasteners are available. If excessive vibration, salt condensate, extreme chemical attack, or temperature over 350°F. may be expected to exist in the structure — consult manufacturer.

ERECTION OUTLINE AND TOOL DATA FOR "HOLEGRIP" FASTENERS

Drill hole in sheet side laps with $1/2''$ dia. Fabco carbide drill, with electric drill. Use Fabco modified nutrunner, with special Fabco mechanical socket stocked by Fabricated Products Co., West Newton, Pa.

400 CORRUGATED "ASBESTONE"

Installed with

"Topseal" & "Holegrip" Fasteners

Patented and Patents Pending

These fasteners manufactured by

FABRICATED PRODUCTS COMPANY

WEST NEWTON, PA.

CORRUGATED ASBESTONE DIVISION

NATIONAL GYPSUM COMPANY

BOX 5257 B **NEW ORLEANS, LOUISIANA**

Gold Bond

CORRUGATED ASBESTONE

ROOFING AND SIDING

Staggered Joint Application

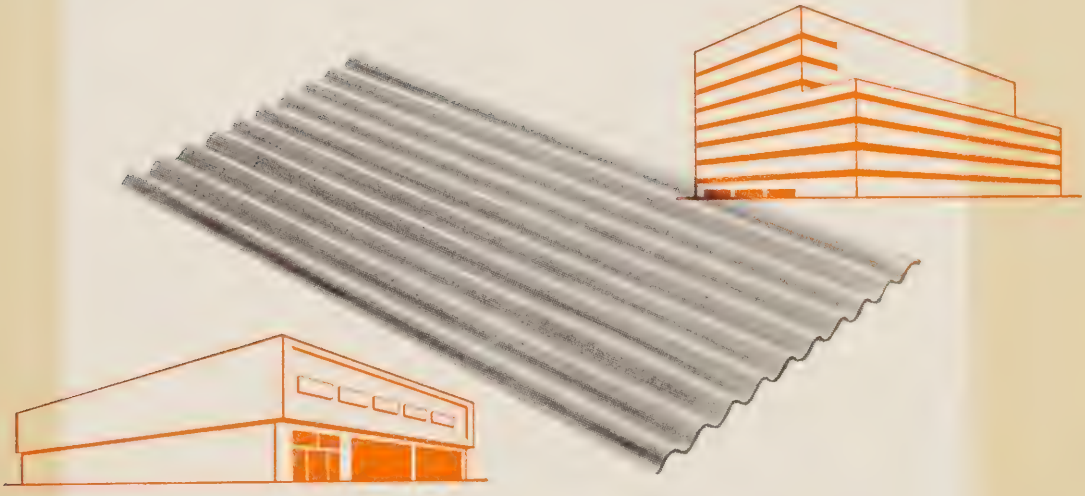

Technical Bulletin

NO. 2032C

OCTOBER 1955

A. I. A. File No. 12-F

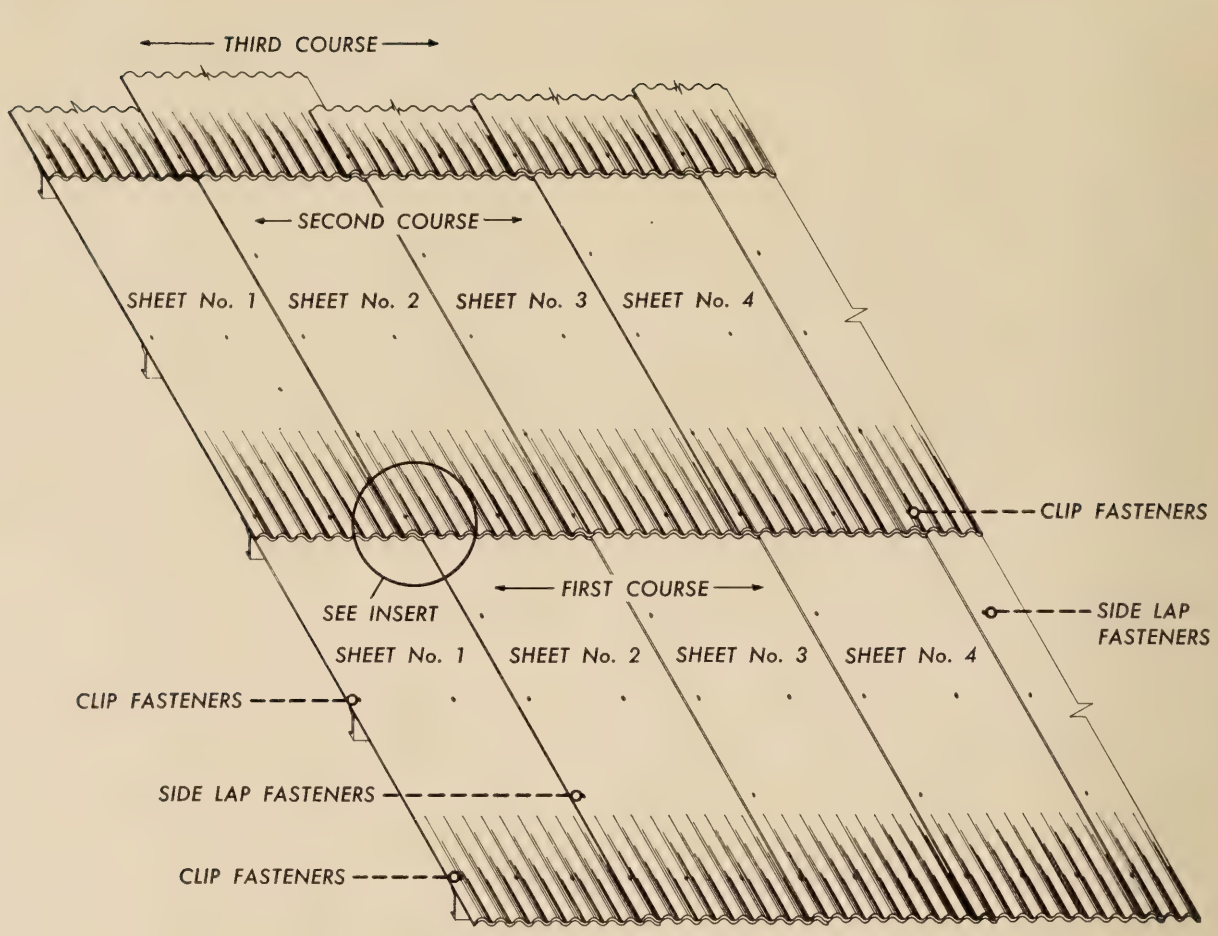

Staggered Joint Application

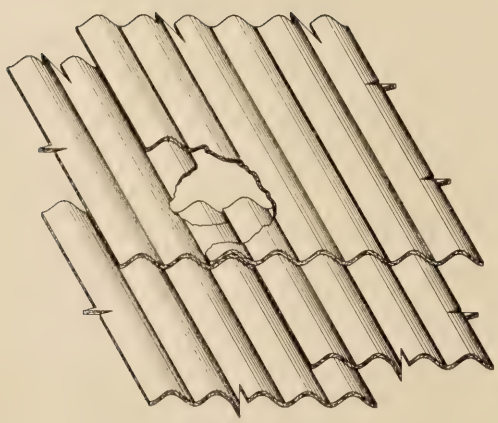

(Insert)
Staggered Joint Corner

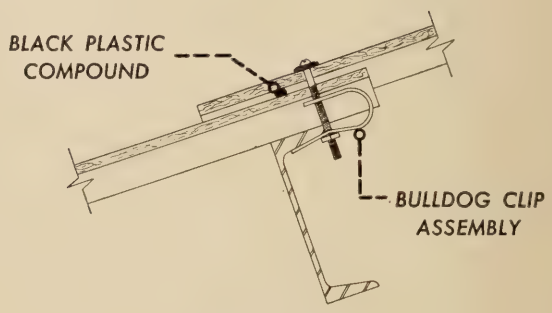

End Lap

Side Lap

Gold Bond®

CORRUGATED ABESTONE

Roofing and Siding

STAGGERED JOINT APPLICATION. In applying CORRUGATED ASBESTONE sheets by the staggered joint method, application usually works from left to right, however, in the event of an extension to an existing building or if the sheets are applied with side laps away from the prevailing winds, application can be worked from right to left.

Before applying any roofing sheets, consult your data sheet or corrugated erection diagram for roof overhang at rakes and eaves or if siding, for overhang at chain walls or floor curbs.

Application of roofing sheets applied from left to right is described below:

FIRST COURSE — (Eave Course) Set first full width sheet (10 corrugations wide) so that the overhang at rake and eave corresponds to dimensions shown on ASBESTONE erection diagram. Be sure this first sheet is in perfect alignment with the horizontal and vertical edges of the building. In this illustration the left side edge of the sheet is set flush with outside edge of purlins (rake edge).

Fasten the lower end of the sheet to the eave purlin at the crest of corrugations 1, 4 and 7.

Fasten the center of the sheet to the intermediate purlin at the crest of the first and sixth corrugations. Do not fasten the top of the sheet at this time if there are more courses of sheets to apply.

At this point in the application, stretch a guide line along the bottom edge of the sheet (eave line) for about sixty feet or more to insure proper alignment of eave sheets in this first course.

Apply an unbroken bead of black compound the entire length of sheet at the crest of the tenth corrugation (extreme right — see side lap detail).

The second full width sheet (10 full corrugations) is laid so that it will lap the first sheet one corrugation. Make sure this sheet nests perfectly at the lap and is kept in alignment with guide line before fastening same to steel. Fasten the lower edge of the sheet to the eave purlin in the crest of the first, (fastener passing through both sheets) fourth, and seventh corrugations. Fasten the center of the sheet to the intermediate purlin in the crest of the first, (fastener passing through both sheets) and sixth corrugations. Do not fasten the top of this sheet at this time if more courses of sheets are to be applied.

Apply seam bolt (side lap bolt) in the center of purlin spans at side laps. These fasteners can be applied at the same time sheets are fastened to the purlins.

The third, fourth, fifth, etc., sheets in this course can then be applied in the same manner as the second sheets described above.

The last sheet in the first course (extreme right end of the building) should be cut so that the outside edge of the sheet will fall flush with the outside edge of the purlins, corresponding to the gable detail at start of this course.

SECOND COURSE. Before starting the second course of sheets check erection diagrams for length of end lap and chalk a guide line across the top of the first course of sheets, measuring from the bottom of the eave course sheets.

Apply an unbroken bead of black compound across the top of the first sheet in the first course; this bead should be located about one inch below intended bolt holes and should follow the contour of the corrugations. (See end lap detail).

Cut one full corrugation off the first sheet (leaving nine full corrugations) in the second course. Apply this sheet (nine full corrugations) so that the corrugations nest perfectly and are in alignment with both the chalk line and the vertical edge of the building before fastening. The lower right hand corner of this sheet will automatically butt against the upper left edge of the second sheet in the first course.

Fasten the lower end of the sheet to the bottom purlin in the crest of the first and fifth corrugations. (Fasteners passing through both upper and lower sheets.) Fasten the center of the sheet to the intermediate purlin in the crest of the first and fifth corrugations. (Do not fasten the top of the sheet at this time if there are more courses of sheets to apply.)

Before applying the second sheet in this course, apply an unbroken bead of black compound the entire length of the sheet at the crest of the last corrugagation (extreme right) of the first sheet in this course. (See side lap detail.) Another continuous bead of black compound is applied across the top of the second sheet in the first course; this bead should be located about one inch below the intended bolt holes and should follow the contour of the corrugations. (See end lap detail.)

Apply second sheet (10 full corrugations) in this course so that it will lap the first sheet one corrugation, keeping the bottom end of this sheet in alignment with chalk line. Be sure all corrugations nest perfectly before fastening.

Fasten the lower end of this sheet to the bottom purlin in the crest of the first corrugation (fastener passing through three sheets) and the crest of the sixth corrugation (fastener passing through both upper and lower sheets). Fasten the center of this sheet to the intermediate purlin at the crest of the first corrugation (fastener passing through both sheets) and at the crest of the sixth corrugation. Do not fasten the top of this sheet at this time if there are more courses of sheets to apply.

Apply seam bolts (side lap bolts) in the center of purlin spans at side laps; these fasteners can be applied when sheets are fastened to the purlins.

The third, fourth, fifth, etc., sheets in this course can then be applied in the same manner as the second sheet described above.

The last sheet in this course (extreme right end of the building) should be cut so that the outside edge of the sheet will fall flush with the outside edge of the purlins maintaining alignment with extreme edge of first course sheet.

THIRD COURSE (assumed final course in roof slope). Before starting the third and final course of sheets, check erection diagram for length of end lap and chalk a guide line across the top of the second course sheets, measuring from the bottom of the sheet.

Apply an unbroken bead of black compound across the top of the first sheet in the second course; this bead should be located about one inch below the intended bolt holes and should follow the contour of the corrugations. (See end lap detail.)

Cut two full corrugations off the first sheet (leaving eight full corrugations) in the third course.

Apply this sheet (eight full corrugations) so that the corrugations nest perfectly and are in alignment with both the chalk line and the vertical edge of the building before fastening.

The lower right hand corner of this sheet will automatically butt against the upper left edge of the second sheet in the second course.

Fasten the lower end of the sheet to the bottom purlin in the crest of the first and fourth corrugations. (Fasteners pass through upper and lower sheets.)

Fasten the center of the sheet to the intermediate purlin at the crest of the first and fourth corrugation. Fasten the top of the sheet to the upper purlin at the crest of the first and third corrugations.

Before applying the second sheet in this course apply an unbroken bead of black compound the entire length of the sheet at the crest of the last corrugation (extreme right) of the first sheet in this course. (See side lap detail). Another continuous bead of black compound is applied across the top of the second sheet in the second course; this bead should be located about one inch below the intended bolt holes and should follow the contour of the corrugations. (See end lap detail).

Apply second sheet (10 full corrugations) in this course so that it will lap the first sheet one corrugation, keeping the bottom end of this sheet in alignment with chalk line; be sure all corrugations nest perfectly before fastening.

Fasten lower end of this sheet to the bottom purlin in the crest of the first corrugation (fastener passing through three sheets) and the crest of the sixth corrugation (fastener passing through both upper and lower sheets). Fasten middle of sheet to intermediate purlin at the crest of the first corrugation (fastener passing through both sheets) and at the crest of the sixth corrugation.

Fasten the top end of the sheets to the upper purlin at the first corrugation crest (fastener passing through both sheets) and at the sixth corrugation crest.

Apply seam bolts (side lap bolts) in the center of purlin spans at side lap; these fasteners to be applied at the same time sheets are fastened to purlins.

The third, fourth, fifth, etc., sheets in this course can then be applied in the same manner as the second sheet described above.

The last sheet in this course (extreme right end of building) should be cut off so that the outside edge of this sheet will fall flush with the outside edge of the purlins maintaining alignment with extreme edge of first and second course sheets.

NOTE: If there are more courses of sheets, than described above, the width of the first sheet in each succeeding course should be diminished by one corrugation. If there should be a fourth course, start off with a full seven corrugation wide sheet; if a fifth course is needed, start off with a six corrugation wide sheet, etc.

CORRUGATED ASBESTONE DIVISION

NATIONAL GYPSUM COMPANY

BOX 5257 B **NEW ORLEANS, LOUISIANA**

Gold Bond®

CORRUGATED ASBESTONE

ROOFING AND SIDING

Straight Joint Application

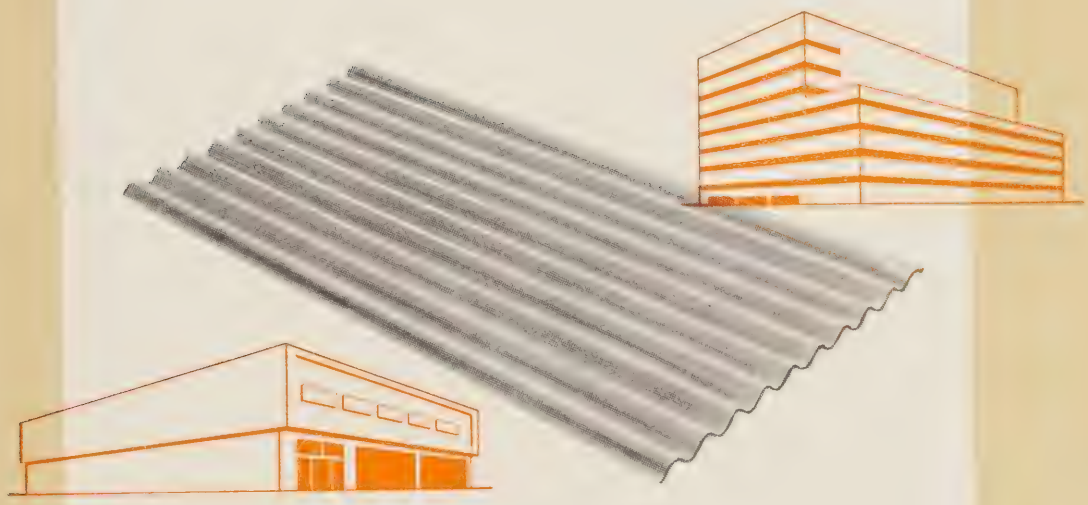

Technical Bulletin

NO. 2032D

AUGUST 1956

A. I. A. File No. 12-F

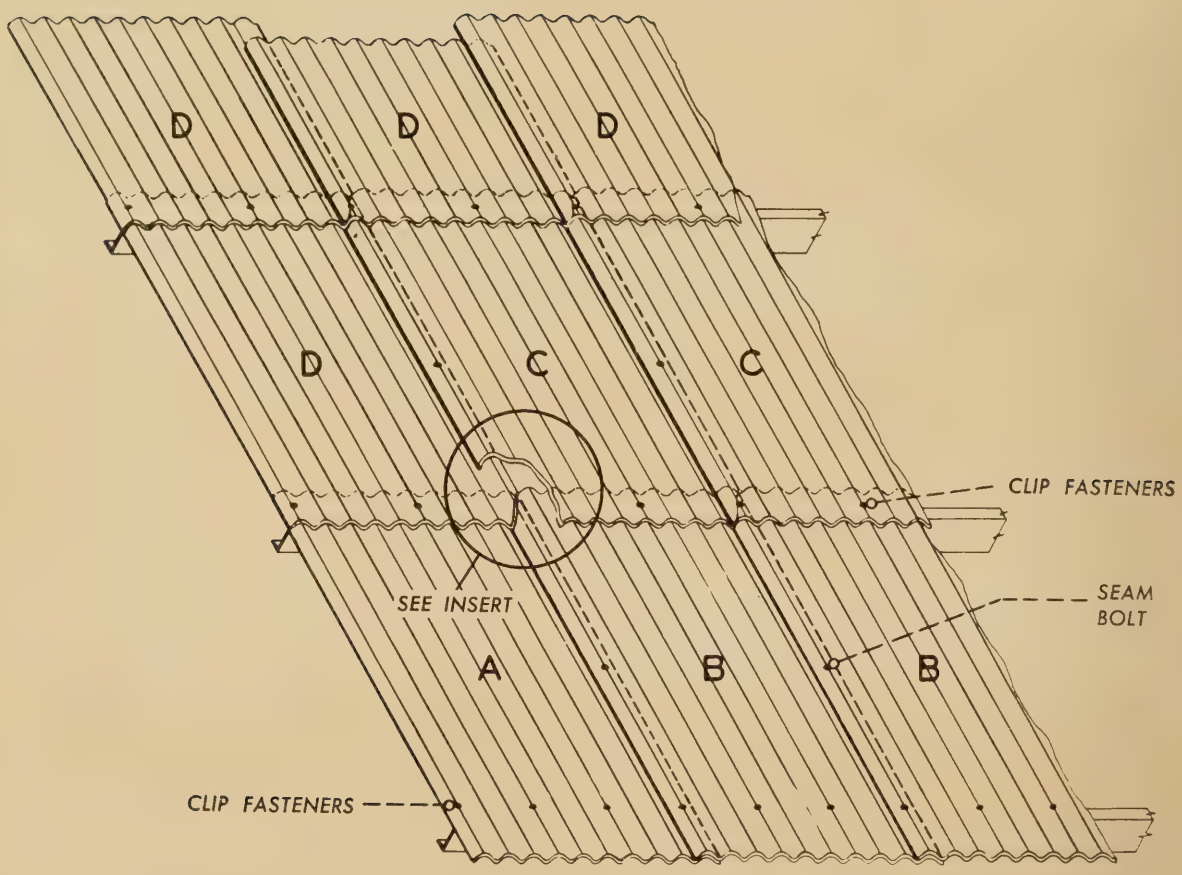

Straight Joint Application

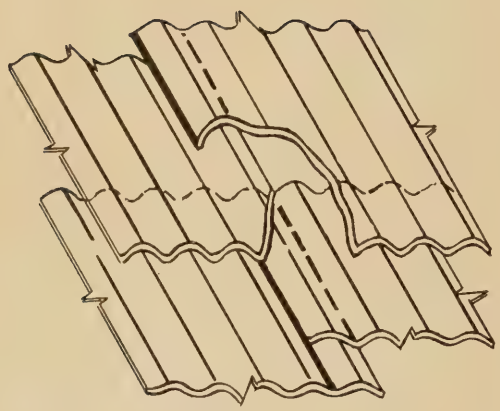

(Insert)
Straight Joint Corner

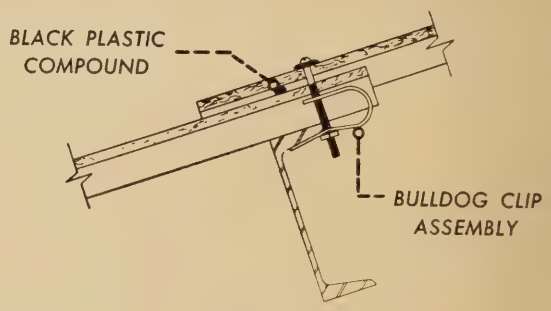

End Lap

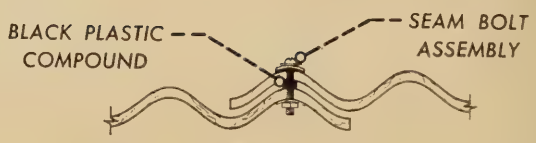

Side Lap

CORRUGATED ASBESTONE

Roofing and Siding

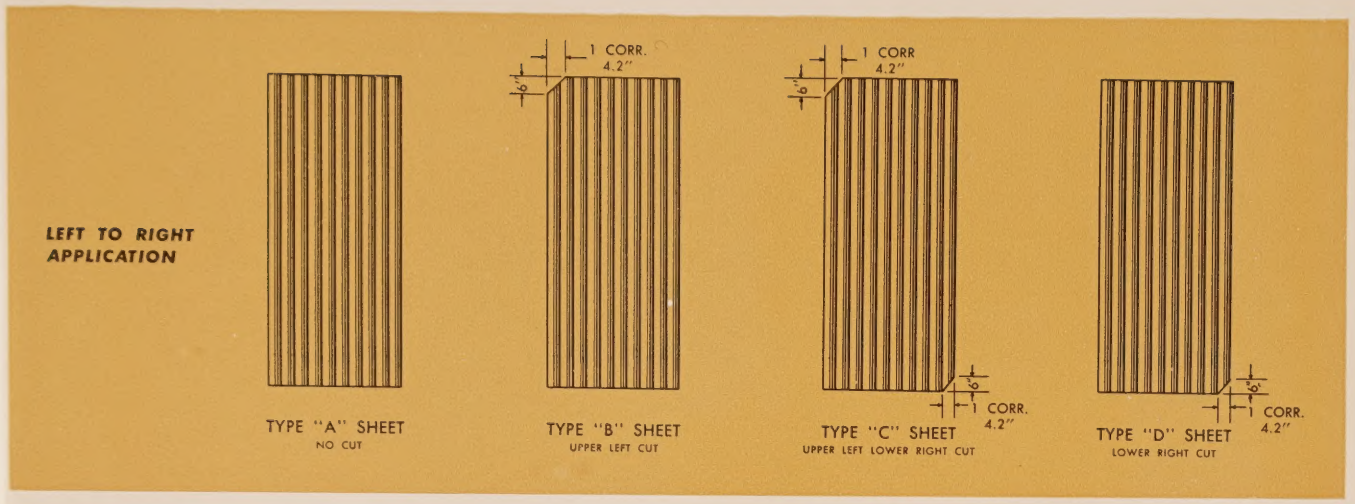

CUT CORNER APPLICATION. Straight joint (cut corner) application is employed where architectural effect is desired. In this application all vertical and horizontal edges of sheets are kept in a straight line by clipping the corners of the sheets. Straight joint (cut corner) method can be applied from either left to right or right to left depending upon the prevailing conditions.

In applying sheets from left to right there are four types of cut corner sheets used:

Type A — No corners cut.
Type B — Upper left hand corner cut.
Type C — Upper left and lower right hand corners cut.
Type D — Lower right hand corner cut.

The lower right hand corners of Type C and D sheets are identified by the red paint line in the diagonal cut. See illustration above.

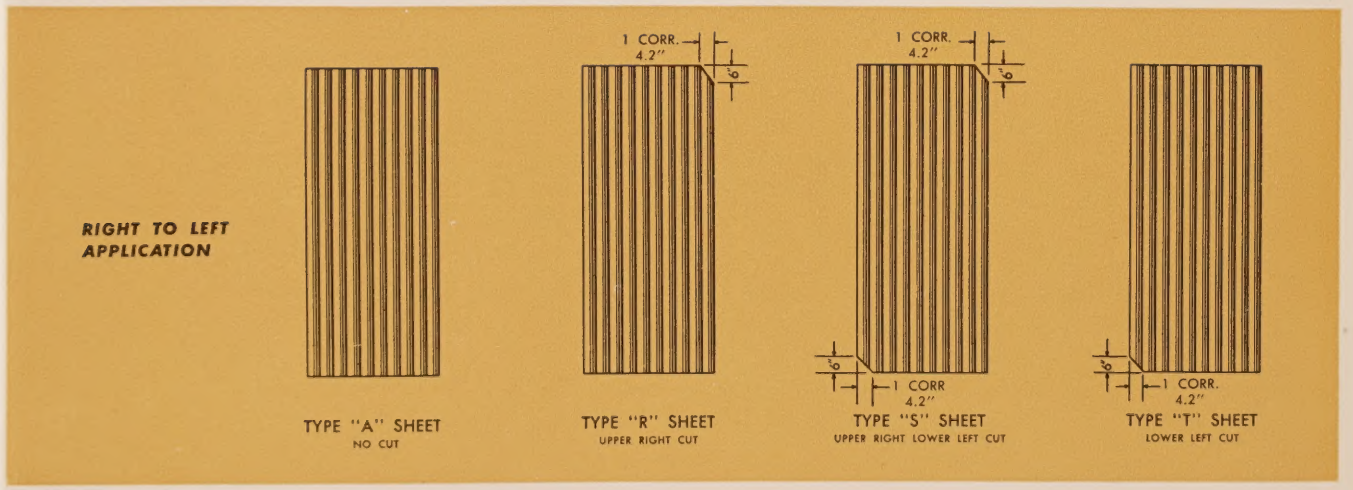

In applying sheets from right to left, there are four types of cut corner sheets used:

Type A — No corners cut.
Type R — Upper right hand corner cut.
Type S — Upper right and lower left hand corners cut.
Type T — Lower left hand corner cut.

The upper right hand corner of Type R sheets can be identified by the green paint line in the diagonal cut. The lower left hand corner of Type S and T Sheets can be identified by the yellow paint line in the diagonal cut. See illustrations above.

The diagonal cut measures one full corrugation (4.2″) across the edge of the sheet and 6″ along the side edges of the sheet. This cut is standard and allows for a one corrugation side lap and six inch end lap. Where end laps greater than six inches are employed, diagonal cuts will be necessary and must be cut in the field. The depth of the diagonal cut depends on the length of the end lap.

Examples. To make a diagonal cut for a one corrugation side lap and a ten inch end lap application, measure one full corrugation (4.2″) across the edge of the sheet and ten inches along the outside edge of the sheet. From these two points make the diagonal cut.

To make a diagonal cut for a two corrugation side lap and a ten inch end lap application, measure two full corrugations (8.4″) across the edge of the sheet and ten inches along the outside edge of the sheet. From these two points make the diagonal cut.

STRAIGHT JOINT APPLICATION. In applying corrugated Asbestone sheets by the straight joint method, application usually works from left to right, however, in the event of an extension to an existing building or if the sheets are applied with side laps away from the prevailing winds, application can be worked from right to left.

Before applying any roofing sheets you should consult your data sheet or corrugated erection diagram for roof overhang at rakes and eaves or, if siding, for overhang at chain walls or floor curbs.

Application of roofing sheets applied from left to right is described below as follows:

FIRST COURSE—(Eave Course). Set first sheet (Type A. No corners cut) so that the overhang at rakes and eaves corresponds to dimensions shown on Asbestone erection diagrams. Be sure this first sheet is in perfect alignment with the horizontal and vertical edges of the building.

Fasten the lower end of the sheet to the eave purlin at the crest of the first, fourth and seventh corrugations.

Fasten the center of the sheet to the intermediate purlin at the crest of the first, and sixth corrugations. Do not fasten the top of the sheet at this time if there are more courses of sheets to apply.

At this point in the application, stretch a guide line along the bottom edge of the sheet (eave line) for about thirty or more feet to insure proper alignment of eave sheets in this first course. Apply an unbroken bead of black compound to the entire length of the sheet at the crest of the tenth corrugation (extreme right. See side lap detail.)

The second sheet (Type B. Upper left corner cut) is laid so that it will lap the first sheet one corrugation.

Make sure this sheet nests perfectly at the lap and is kept in alignment with guide line before fastening same to steel. Fasten the lower edge of the sheet to the eave purlin in the crest of the first, (fastener passing through both sheets) fourth and seventh corrugations. Fasten the center of the sheet to the intermediate purlin in the crest of the first, (fastener passing through both sheets) and sixth corrugations. Do not fasten the top of the sheet at this time if more courses of sheets are to be applied.

Apply seam bolt (side lap bolt) in the center of purlin spans at side lap. These fasteners can be applied at the same time sheets are fastened to the purlins.

The third, fourth and all succeeding sheets in this course can then be applied in the same manner as the second sheet described above. These sheets are all Type B.

The last sheet in the first course (extreme right end of the building) should be cut so that the outside edge of the sheet will correspond to the gable overhang at start of this course.

SECOND COURSE. Before starting the second course of sheets, snap a chalk line across the first course of sheets. This line is located 6″ below the upper edge of first course sheets.

Apply an unbroken bead of black compound across the top of the first sheet in the first course. This bead should be located about one inch below intended bolt hole and should follow the contour of the corrugations.

The first sheet of the second course (Type D. Lower right corner cut) should be applied so all corrugations nest perfectly and sheet is in alignment with both the chalk line and the vertical edge of the building before fastening. The lower right hand beveled corner of this sheet will butt against the upper left hand beveled corner of the second sheet in the first course.

Fasten the lower end of the sheet to the bottom purlin in the crest of the first and sixth corrugations (fastener passing through both upper and lower sheets). Fasten the center of the sheet to the intermediate purlin in the crest of the first and sixth corrugations. Do not fasten the top of the sheet at this time if there are more courses of sheets to apply.

Before applying the second sheet in this course, apply an unbroken bead of black compound the entire length of the sheet at the crest of the last corrugation (extreme right) of the first sheet in this course. Another continuous bead of black compound is applied across the top of the second sheet in the first course about one inch below the intended fastener holes and should follow the contour of the corrugations. (See end lap detail.)

Apply second sheet (Type C upper left and lower right corner cut) in this course so that it will lap the first sheet one corrugation keeping the bottom end of this sheet in alignment with chalk line. Be sure all corrugations nest perfectly before fastening. The lower right hand beveled corner of this sheet will butt against the upper left hand beveled corner of the third sheet in the first course.

Fasten the lower end of this sheet to the bottom purlin in the crest of the first corrugation (fastener passing through three sheets) and the crest of the sixth corrugation (fastener passing through both upper and lower sheets). Fasten the center of this sheet to the intermediate purlin at the crest of the first corrugation (fastener passing through both sheets) and at the crest of the sixth corrugation. Do not fasten the top of the sheet at this time if there are more courses of sheets to apply.

Apply seam bolts (side lap bolts) in the center of purlin spans at side laps. These fasteners can be applied at the same time that sheets are fastened to the purlins.

The third, fourth and all succeeding sheets in this course can then be applied in the same manner as the second sheet described above. These are all Type C sheets with the exception of the last sheet in the course which is a Type B sheet.

The last sheet in this course (Type B) at the extreme right end of the building should be cut so that the outside edge of the sheet will be aligned with outside edge of first course sheet.

THIRD COURSE (assumed final course in roof slope). Before starting the third course of sheets snap a chalk line across the second course of sheets. This line should be located 6″ below the upper edge of second course sheets.

Apply an unbroken bead of black compound across the top of the first sheet in the second course; this bead should be located about one inch below the intended bolt holes and should follow the contour of the corrugations.

The first sheet of the third course (Type D — Lower right corner cut) should be applied so that the corrugations nest perfectly and sheet is in alignment with both the chalk line and the vertical edge of the building before fastening. The lower right hand beveled corner of this sheet will butt against the upper left hand beveled corner of the second sheet in the second course.

Fasten the lower end of the sheet to the bottom purlin in the crest of the first and the sixth corrugations. (Fasteners passing through both upper and lower sheets.)

Fasten the center of the sheet to the intermediate purlin at the crest of the first and sixth corrugations.

Before applying the second sheet in this course, apply an unbroken bead of black compound the entire length of the sheet at the crest of the last corrugation (extreme right) of the first sheet on this course. Another continuous bead of black compound is applied across the top of the second sheet in the second course; this bead should be located about one inch below the intended fastener holes and should follow the contour of the corrugations.

Apply second sheet (Type D lower right corner cut) in this course so that it will lap the first sheet one corrugation, keeping the bottom end of this sheet in alignment with chalk line. Be sure all corrugations nest perfectly before fastening. The lower right hand beveled corner of this sheet will butt against the upper left hand beveled corner of the third sheet in the second course. Fasten lower end of this sheet to the bottom purlin in the crest of the first corrugation (fastener passing through three sheets) and the crest of the sixth corrugation (fastener passing through both upper and lower sheets). Fasten center of sheet to intermediate purlin at the crest of the first corrugation (fastener passing through both sheets) and at the crest of the sixth corrugation. Fasten the top end of the sheets to the upper purlin at the crest of the first corrugation (fastener passing through both sheets) and at the crest of the sixth corrugation.

Apply seam bolts (side lap bolts) in the center of purlin spans at side laps. These fasteners may be applied at the same time sheets are fastened to purlins. The third, fourth and all succeeding sheets in this course can then be applied in the same manner as the second sheet described above. These are all Type D sheets with the exception of the last sheet in the course which is a Type A sheet.

The last sheet in this course (Type A — no corners cut) should be cut off so that the outside edge of the sheet will be aligned with outside edge of second course sheets.

COPYRIGHT 1956, NATIONAL GYPSUM COMPANY

CORRUGATED ASBESTONE DIVISION
NATIONAL GYPSUM COMPANY
BOX 5257 B NEW ORLEANS, LOUISIANA

FORM 2032D J 8-56

AVERY
CLASSICS

RY
SICS

always specify . . .

Gold Bond®

BUILDING PRODUCTS

NATIONAL GYPSUM COMPANY · BUFFALO 2, NEW YORK

Offices in Principal Cities Throughout U. S. A.

COPYRIGHT 1957, NATIONAL GYPSUM COMPANY

FORM 2785

LITHO IN U. S.